TOP 10 SHOP-BUILT TABLE SAW UPGRADES

Woodsmith®

www.woodsmith.com

Vol. 28 / No. 164

NESTING TABLES

3 tables, 1 technique

Wood Fillers: Make your mistakes disappear

6 creative Clamping Solutions

The secrets to Perfect Panels on your next project

Brad Nailer do's & don'ts

looking inside

Table of Contents

from our readers
Tips & Techniques 4

all about
Threaded Inserts 8
Easy to install, press-fit inserts will allow you to add knock-down hardware to your next project.

tools of the trade
Western Back Saws 10
A new generation of hand saws takes quality to a new level. Find out what to look for.

techniques from our shop
6 Creative Clamping Solutions . . . 12
Odd-shaped parts and tough joints are no match for these clamping tricks.

jigs and fixtures
Rosette Cutters 14
Use these big bits for a decorative touch.

projects

weekend project
Picture Frame 16
Open this tabletop frame to reveal four, special photos. Close it to show off your skill in making solid-wood raised panels.

designer series project
Compact Desk 22
Simple plywood construction makes this desk solid. Plastic laminate gives it style.

DESIGNER'S NOTEBOOK
tips from our shop
Shop Notebook 30

cover project
Nesting Tables . . 32
Build these three space-saving tables with one, easy-to-master router table technique.

Folding Picture Frame page 16

working with tools
Brad Nailers 40
Put down your hammer. Learn shop-tested techniques for better results with a nailer.

small shop solutions
Top 10 Table Saw Upgrades 42
These shop-built accessories will add speed, precision, and safety to your saw.

finishing room
ONLINE EXTRA video workshop
Make Mistakes Disappear 46
Woodworking goofs are a fact of life. Here are some tips for invisible repairs.

in the mailbox
Q & A 48

hardware and supplies
Sources 49

details of craftsmanship
ONLINE EXTRA video workshop
Secrets to Perfect Panels 50
Adding a few, simple details can take your next project from good to great.

Compact Desk page 22

editor's note
Sawdust

Someone once told me there are two things to remember about woodworking. First, "details make a difference." And I think it's true. Quite often it's small, simple things that can make or break a project. In this issue, we take a look at one of those details that makes a difference — the secrets to perfect panels.

I know when it comes to gluing up a panel, it's tempting just to grab a few boards, put glue on the edges, and clamp them up. And while that approach will certainly get the job done, you won't necessarily end up with the best-looking panel. In the article on page 50, we'll show you the tips and techniques you need to know to make better-looking panels for your next project.

The second thing I was told was, "All woodworker's make mistakes, a good woodworker is just better at hiding them." While this is a bit of tongue-in-cheek humor, there's an underlying truth.

I know we've built well over a thousand projects in our shop over the years, and I'm willing to bet not one of them is perfect. But we've come up with a few tricks to prevent those mistakes from being too noticeable. For an easy way to make some of your mistakes disappear, check out the article beginning on page 46.

Terry

FREE TIPS BY EMAIL

Now, you can have the best, time-saving secrets, solutions, and techniques sent directly to your computer. Just go to www.Woodsmith.com and click on "FREE Tips by Email" to sign up. You'll receive a new tip by e-mail each week.

ONLINE EXTRA video workshop Woodsmith GO ONLINE EXTRAS

These two symbols let you know there's more information online at www.Woodsmith.com. There you'll see step-by-step videos, technique and project animation, bonus cutting diagrams, and a lot more.

Tips & Techniques

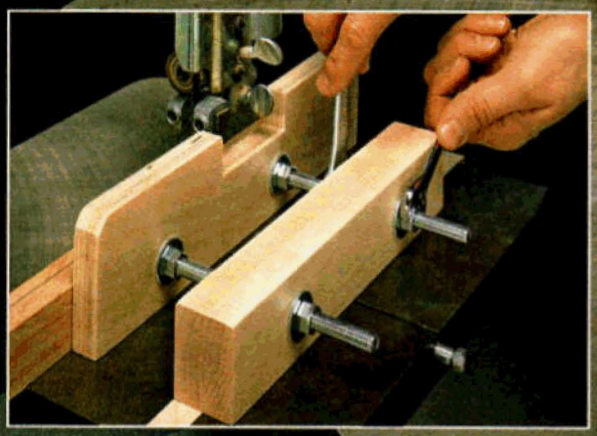

Adjustable Resaw Fence

I do a lot of resawing on my band saw, and it was always a challenge to get the accuracy I needed. Over the years, I've tried different methods and jigs for resawing, but nothing seemed to work — that is, until I designed and built the adjustable fence shown here.

Unlike other resaw fences, this one sits to the right of the blade. This allows the fence to take advantage of the miter slot in your saw table. Adding a cleat to the runner prevents the fence from moving off the table as you slide the workpiece through the saw.

The thick mounting block and long fence give the fence plenty of stability. And, the fence is notched along its top edge to make room for the saw guide blocks.

You can adjust the fence to the thickness you need to cut by adjusting the nuts between the fence and the block (inset photo). This setup also allows for adjustment for blade drift.

Bob Burns
Harrow, Ontario, Canada

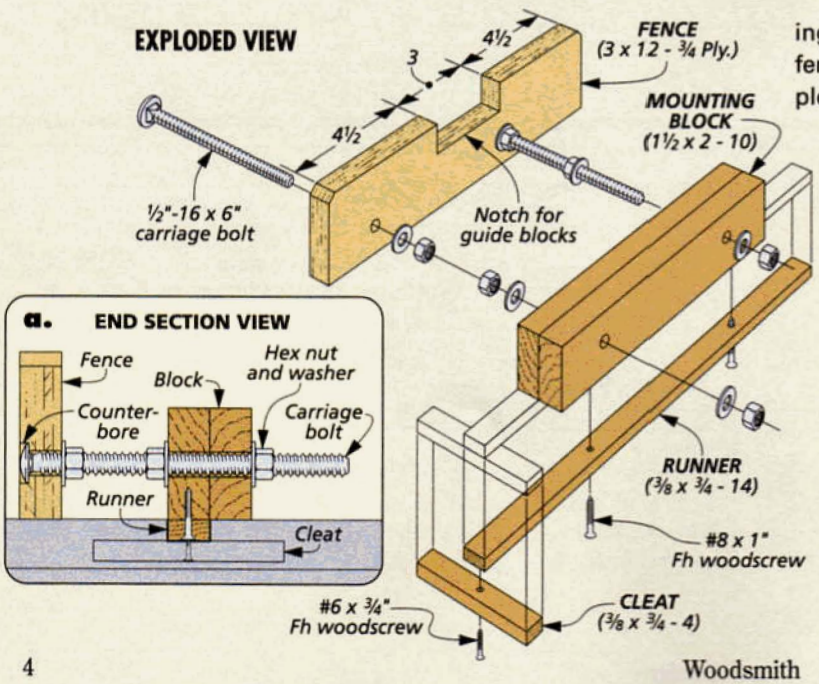

SUBMIT YOUR TIPS

If you have an original shop tip, we would like to hear from you and consider publishing your tip in one or more of our publications. Just write down your tip and mail it to: *Woodsmith,* Tips and Techniques, 2200 Grand Avenue, Des Moines, Iowa 50312. Please include your name, address, and daytime phone number in case we have any questions. If you would like, FAX it to us at 515-282-6741 or send us an email message at: woodsmith@woodsmith.com. We will pay up to $200 if we publish your tip.

Sandpaper Cutter

I buy 9" x 11" sheets of sandpaper in bulk for use in my sander. Cutting these sheets to fit my sander is a tedious process. To make the task easier, I built the sandpaper cutter you see pictured on the right.

As in the drawing below, I started with a ¾" plywood base. The stop is attached a little off-center to rip full sheets in half on one side, then rip the half-sheets down to quarter-sheets on the other side.

The two 12"-long hacksaw blades make perfect cutters. Inserting washers between the blades and the base will raise the blades high enough to slide the sheets under it.

The jig makes clean tears and takes far less time than measuring and cutting the sandpaper with scissors.

J. David Ross
Savannah, Georgia

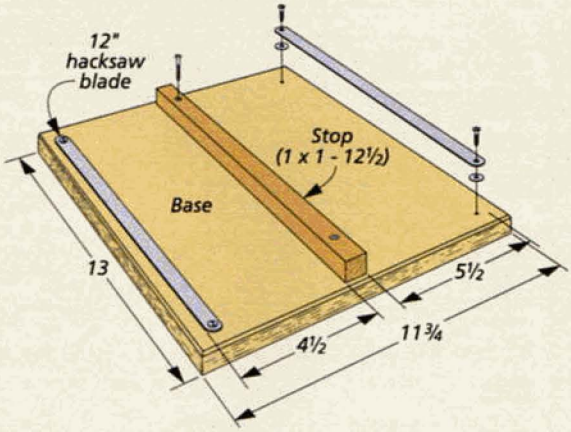

Magnetic Tool Storage

It seems my steel layout tools like to hide under workpieces and piles of sawdust. So I made a simple magnetic strip to keep them within easy reach.

The strip is nothing but a piece of hardboard with some rare-earth magnets glued with epoxy into holes. The magnets are the same thickness as the hardboard and are exposed on both sides of the strip. That way, they'll hold the strip on my table saw stand, and the steel layout tools will attach firmly to the magnets.

You can use the same idea on your workbench, too. Just attach a couple of cup washers to an end of your workbench. The magnets are plenty strong enough to hold the strip to the washers.

Doug Hicks
Urbandale, Iowa

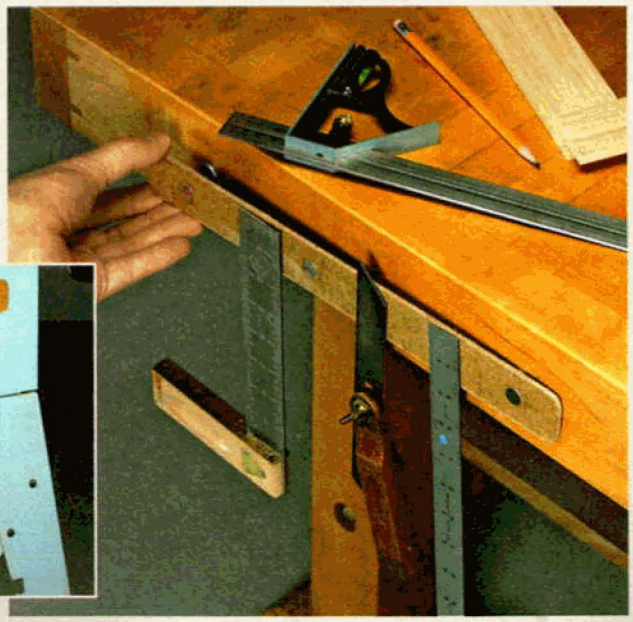

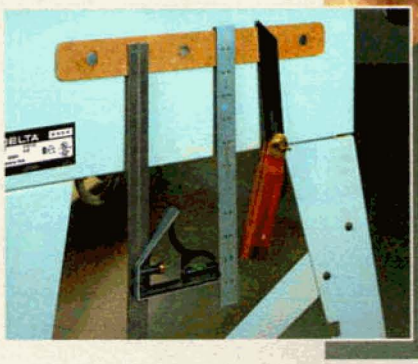

Woodsmith

No. 164 April/May 2006

PUBLISHER Donald B. Peschke

EDITOR Terry J. Strohman

SENIOR EDITORS Vincent Ancona, Bryan Nelson
ASSOCIATE EDITORS Phil Huber, Ted Raife
ASSISTANT EDITORS Ron Johnson, Mitch Holmes, Randall A. Maxey, Dennis Perkins

EXECUTIVE ART DIRECTOR Todd Lambirth
SENIOR ILLUSTRATORS David Kreyling, Dirk Ver Steeg, Harlan V. Clark
ILLUSTRATORS David Kallemyn, Peter J. Larson

CREATIVE DIRECTOR Ted Kralicek

SENIOR PROJECT DESIGNERS Ken Munkel, Kent Welsh, Chris Fitch
PROJECT DESIGNERS/BUILDERS Mike Donovan, John Doyle
SHOP CRAFTSMEN Steve Curtis, Steve Johnson
SR. PHOTOGRAPHERS Crayola England, Dennis Kennedy
ASSOCIATE STYLE DIRECTOR Rebecca Cunningham
ELECTRONIC IMAGE SPECIALIST Allan Ruhnke
VIDEOGRAPHERS Craig Ruegsegger, Mark Hayes

Woodsmith® (ISSN 0164-4114) is published bimonthly (Feb., Apr., June, Aug., Oct., Dec.) by August Home Publishing Company, 2200 Grand Ave, Des Moines, IA 50312.

Woodsmith® is a registered trademark of August Home Publishing.
Copyright© 2006 August Home Publishing Company. All rights reserved.

Subscriptions: Single copy: $4.95. One year subscription (6 issues), $24.95. (Canada/International add $10 per year, U.S. funds.)
Canadian Subscriptions: Canada Post Agreement No. 40038201. Send change of address information to PO Box 881, Station Main, Markham, ON L3P 8M6. Canada BN 84597 5473 RT
Periodicals Postage Paid at Des Moines, IA and at additional offices.
Postmaster: Send change of address to *Woodsmith*, Box 37112, Boone, IA 50037-2112.
Subscription Questions? Write to *Woodsmith*, P.O. Box 842, Des Moines, IA 50304 or call 1-800-333-5075, 8:00 am to 5:00 pm, Central Time, weekdays. Or send an email to: orders@woodsmith.com
Email: woodsmith@woodsmith.com
World Wide Web: http://www.Woodsmith.com

www.Woodsmith.com

ONLINE SUBSCRIBER SERVICES

- **ACCESS** your account
- **CHECK** on a subscription payment
- **TELL US** if you've missed an issue
- **CHANGE** your mailing or e-mail address
- **RENEW** your subscription
- **PAY** your bill

Click on "Subscriber Services" in the list on the left side of our home page. Menus and forms will take you through any of the account-maintenance services you need.

HOW TO REACH US:

FOR SUBSCRIPTIONS, ADDRESS CHANGES OR QUESTIONS, WRITE OR CALL:
Customer Service
2200 Grand Ave., Des Moines, IA 50312
800-333-5075 8 a.m. to 5 p.m. CT

OR VISIT OUR WEB SITE:
www.Woodsmith.com

AUGUST HOME PUBLISHING COMPANY

Printed in U.S.A.

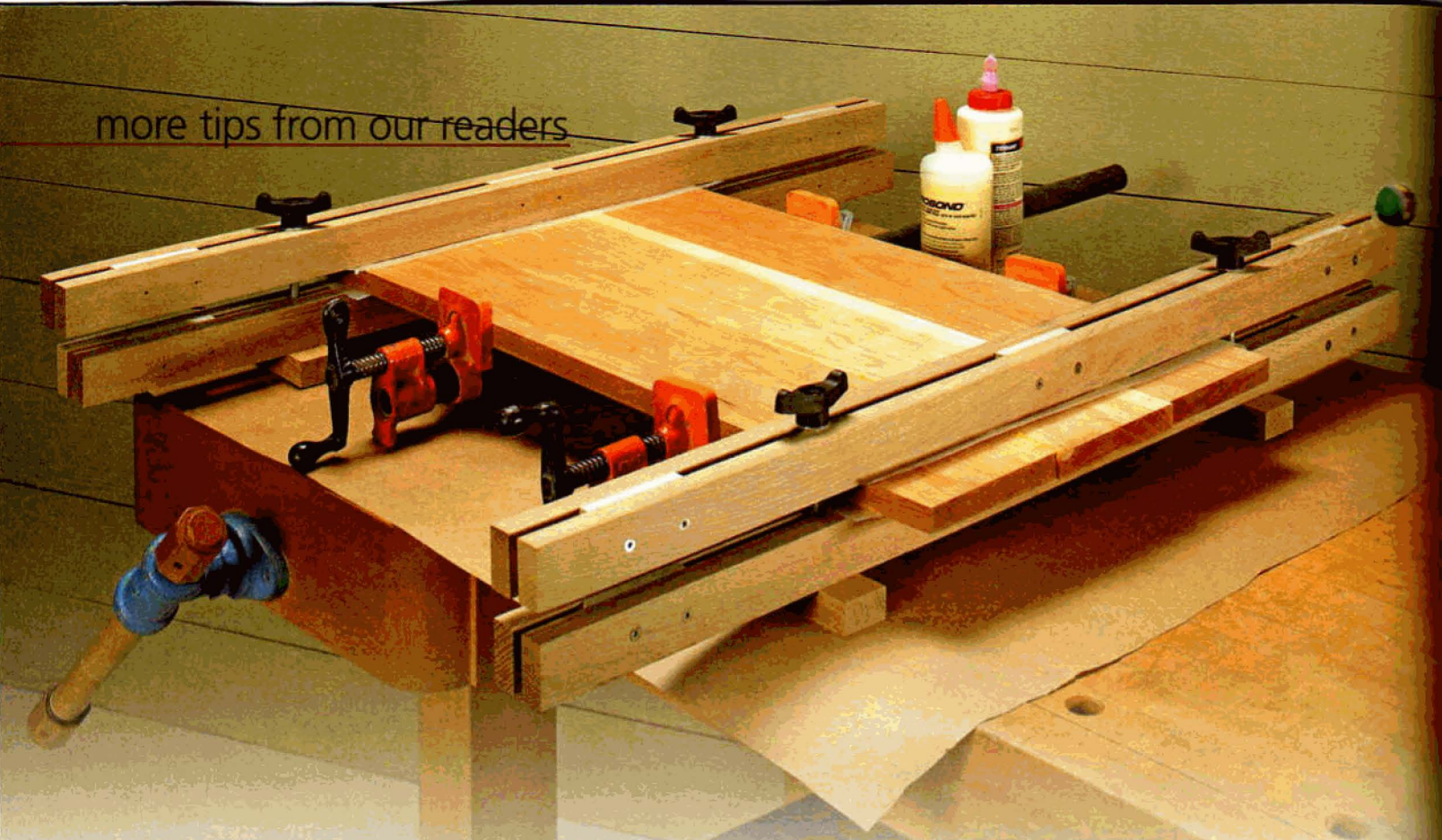

Adjustable Panel Cauls

As any woodworker knows, one of the difficulties in clamping a panel is keeping it flat while the glue dries. My solution is the adjustable cauls you see pictured above.

Each caul is made up from four strips of hardwood. As shown in the drawing below, two strips are joined together with spacers placed between each pair to create slots. The slots are wide enough for the carriage bolts you'll use to tighten the cauls. The slots also allow you to position the bolts right at the edges of the panel. This way, when you tighten the cauls, the pressure will be as close to the panel as possible.

The heads of the carriage bolts are countersunk into "feet" that keep the cauls stable on your workbench when they're in use (detail 'a'). Add threaded knobs and washers to the carriage bolts to tighten the cauls together to keep the panel flat.

Since the cauls are made of wood, I put wax paper between the cauls and panel to prevent any glue squeezeout from actually gluing the cauls to the panel.

George Johnson
Canton, Oklahoma

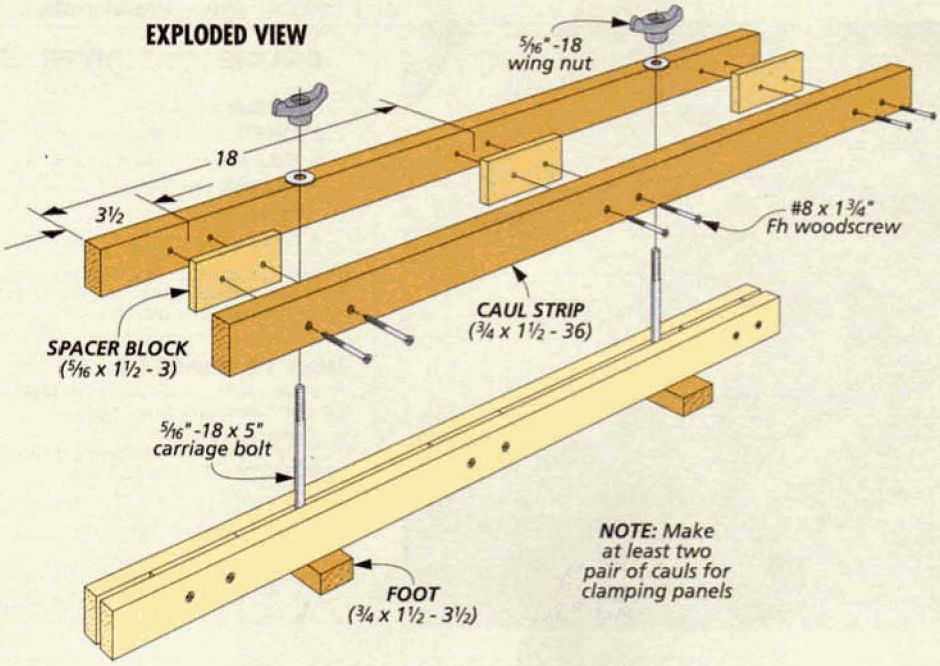

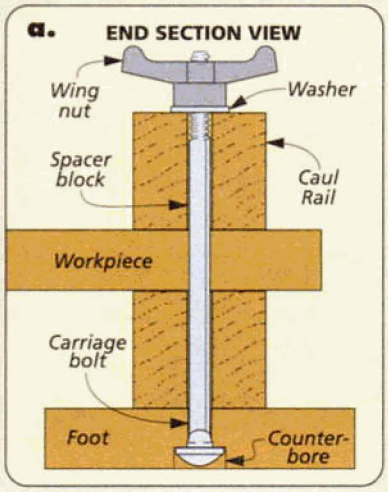

Lathe Bed Tool Base

In my small shop, I'm always figuring out ways to maximize space. One day, I was looking at my lathe, realizing it sits idle for long stretches of time. So, I decided to get some extra value from the floor space it takes up and its heavy, rigid, cast-iron bed.

To do this, I made a simple base for each of my benchtop tools, like my grinder, mortising machine, and bench vise. As you can see in the drawing below, each base is secured to the lathe bed using rabbeted blocks and a pair of threaded knobs and washers installed at the ends of the base.

Whenever I need to use one of these tools, I simply slide the base onto the lathe bed with the rabbeted blocks underneath, and tighten the knobs. This turns my lathe into a multifunction "workstation."

Chris Fitch
Winterset, Iowa

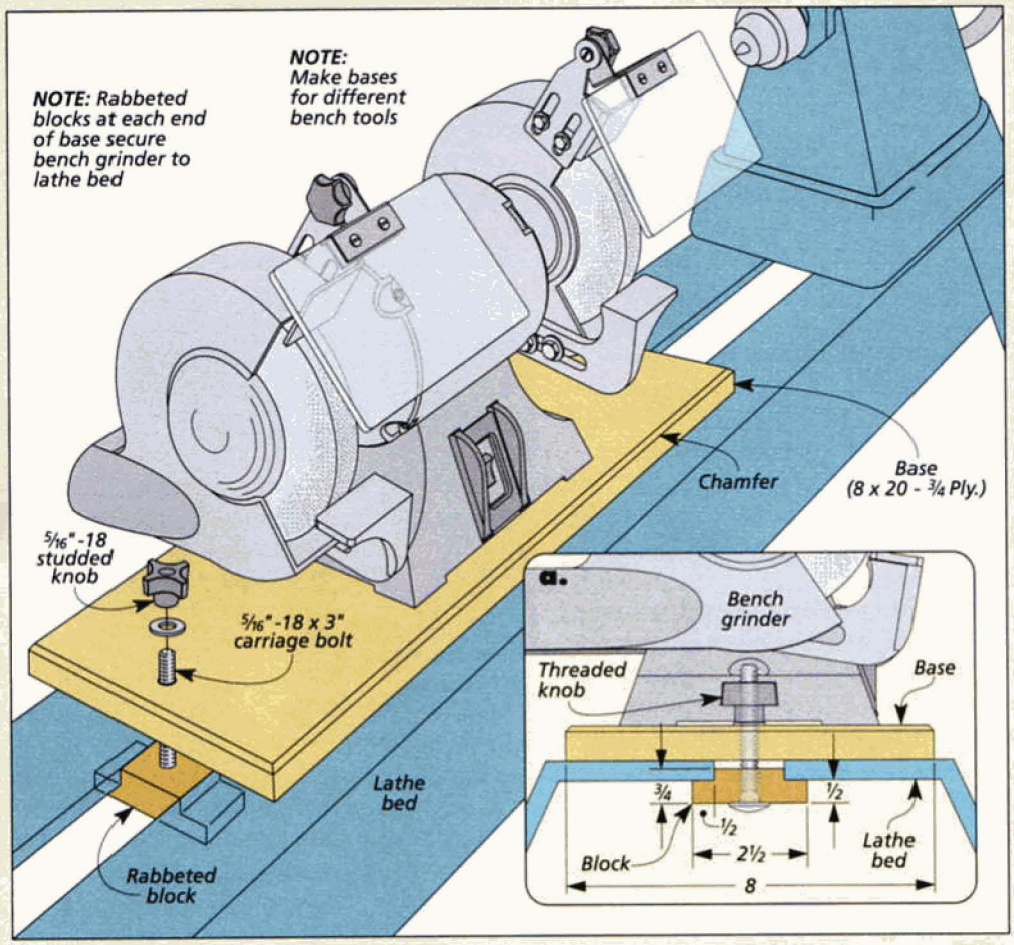

Quick Tips

MEASURING ROUND EDGES

On workpieces with chamfered or rounded edges, accurate measuring from the edge can be difficult.

To solve this problem, I lay a machinist square against the edge and then slide my ruler up to the square to get the measurement.

Bob McRoberts
Mineral, Virginia

ATTACHING CABINET TOPS

Because of the confined spaces inside a cabinet when attaching the top, I'm sometimes unable to apply enough pressure for the screwdriver to remain seated while turning the screw.

My solution was to drill a ¼" hole through the screwdriver handle, perpendicular to the shaft. I then inserted another screwdriver with a ¼" shank through the hole. Now I can turn the screws and apply pressure at the same time, seating the screw in no time.

Roger Dana
Marion, Iowa

TRIMMING SCREWS

To trim off a screw, I install it into a piece of plywood until the trim length is exposed. Then I mount the plywood into my bench vise. The face of the plywood serves as a flat edge to cut the screw square with a hacksaw.

George Haverstraw
Hummelstown, Pennsylvania

Win This Porter-Cable Variable Speed Router

That's right, send us your shop tips. If your tip or technique is selected as the featured reader's tip, you'll win a Porter-Cable variable speed router just like the one shown here. Send your tips and techniques to: *Woodsmith,* Tips and Techniques, 2200 Grand Avenue, Des Moines, Iowa 50312. Or send us an email message at: woodsmith@woodsmith.com.

The Winner!

Congratulations to Bob Burns of Harrow, Ontario, Canada. His adjustable resaw fence was selected as the winner of the Porter-Cable router. His fence gives him the stability and accuracy he's looking for while he resaws stock.

To find out how you could win a Porter-Cable variable speed router, check out the information on the left.

all about

press-fit Threaded Inserts

These threaded inserts are so quick and easy to install, you'll want to have some on hand for your next project.

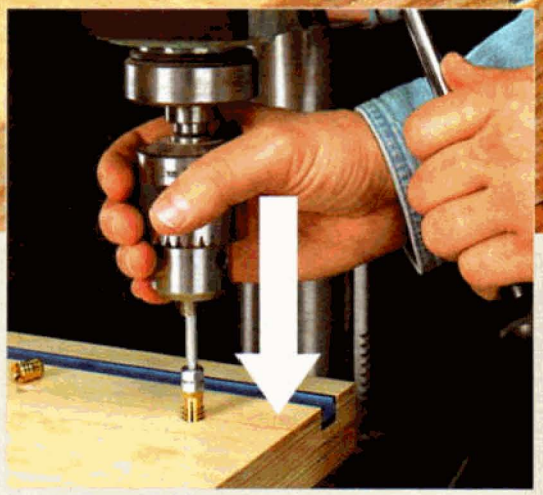

▲ You can install press-fit inserts two ways — tap them in using a bolt, stop nuts, and hammer (main photo above). Or use your drill press to "push" them in, as shown in the inset photo above.

I use threaded inserts on a lot of projects in my shop. But the typical threaded insert can be difficult to install. They have external threads that hold well in most materials but they must be screwed in carefully to keep them straight.

So I decided to look for some other options. What I discovered surprised me. There are a lot of different types of threaded inserts. A couple that intrigued me were press-fit and knock-in threaded inserts. I hadn't seen them used before but they seemed worth trying out.

▲ ***Brass Press-Fit Inserts.*** Sometimes called "finserts" because of their "fins," these inserts hold tight and are quick and easy to install.

GRIPPING POWER

If you take a look at the photos on these two pages, you'll see a couple of different threaded insert designs. Each one uses a slightly different method to grip the wood for secure fastening.

SHARP RIBS. The brass inserts on the left have sharp ribs, or "fins" that grip the wood as the insert is pressed into the hole. As a matter of fact, these inserts are also called "finserts" because of these fins. The fins act a lot like fish hooks.

In the left margin photo, you'll notice that the insert has a slot cut down the middle. This allows the sides of the insert to flex inward a little as you install them. Then the sides expand to force the fins into the surrounding material.

And what's even better is that when you thread in a bolt or screw, it actually forces the ribs further into the material. This makes for a secure fit and it almost guarantees that the inserts won't come loose once they're installed (drawing at left).

The number of fins depends on the size, or overall length, of the insert. And the little vertical ridges at the top of the insert help keep it from spinning or turning loose in the hole.

A POINTED DESIGN. Another type of insert that I came across uses a different method for locking itself into the wood to keep it secure. They use sharp

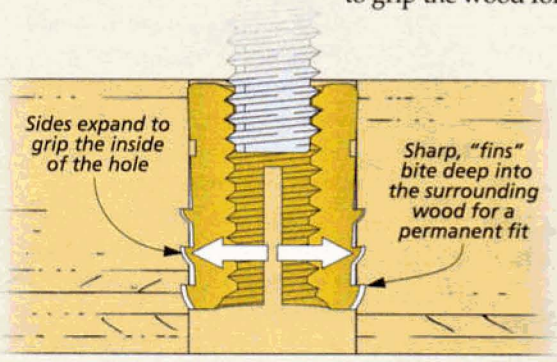

▼ ***Die-Cast Zinc Knock-in Inserts.*** A few taps of the hammer are all you need to install these inserts. You can use them in either stopped (blind) holes or through holes.

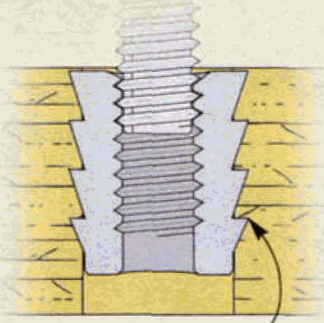

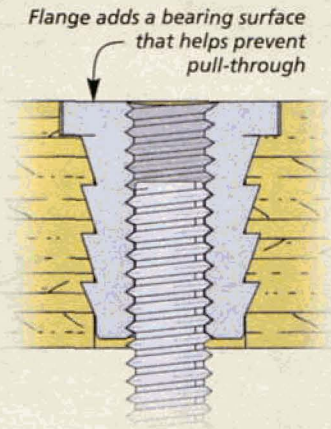

▲ You can order these inserts with an open flange (shown) or closed flange. You can countersink the flange (left) to give your project a more finished look.

points for holding power, as you can see in the photos above.

If you look closely, you'll see that the points, or "barbs," are angled in one direction. This makes it easier to install and prevents the insert from working loose.

FLANGES. In the right photo above, you see a "flanged" variation of these inserts. These inserts have a flange at one end.

These flanges provide a bearing surface to keep the insert from being pulled through the workpiece as a result of overtightening.

You can order these with an open flange like you see in the photo, or with a closed flange (without the hole). You would use an open flange for a through-hole where the bolt or screw might extend past the insert.

There's another use I found for the open-flanged inserts. You can use them to add leveling feet to your projects in no time at all.

TIPS FOR INSTALLATION

Installing press-fit inserts is pretty straightforward. You can tap them in with a hammer or use your drill press to push them in. Here are some tips that will help you get better results while installing them.

PILOT HOLE. These inserts work great in just about any wood or sheet goods. The key is the size of the pilot hole. It's best to check with the manufacturer or supplier to get the right size of pilot hole, but the chart on the right will give you some guidelines you can use.

One thing I learned is that the first few times you install these inserts, you'll swear that the pilot hole is too small. But it turns out to be just right.

TAP THEM IN. You could grab a hammer and knock these inserts into the hole. But it's awkward to do. So I use an installation tool made from a bolt (main photo opposite page). I choose a bolt to fit the insert and one that's long enough to hold comfortably while I tap the insert into the hole. I add a couple of nuts as a bearing surface for the insert. This way, the force of my hammer blows isn't entirely on the threads of the bolt and insert, risking damage.

The bolt also helps you keep the insert straight. This is where your drill press can help.

DRILL PRESS. I found that I could use my drill press (with the power *off*) to "press" the inserts into place. To do this, you'll need to cut off the head of a bolt (inset photo on the opposite page). Spin on a couple of nuts, chuck the bolt into the drill press, thread on the insert and press it in.

It always amazes me what new hardware you can find. Now, I've discovered a new way to add threads to my projects without a lot of fuss. These inserts are so easy to use I'm going to include them in my stash of fasteners in the shop. W

Insert Size	Hole Size
#8	7/32"
#10	1/4"
1/4"	5/16"
5/16"	3/8"

▲ Chart shows pilot hole sizes for the most common inserts. Check with the supplier for the exact size.

What's New: Knock-Down Connectors

The inserts shown on the right are another example of the variation in the design of press-fit inserts. They're used a lot in knock-down construction. They have a decorative finish, like chrome or antique brass. And they have flanges at the end of the insert. This flange has a slight chamfer on the edges to give your project a finished look.

These two pieces have some advantages over traditional knock-down connectors. For example, they don't fall out. They don't spin when you try to tighten them. And you only need one wrench to fasten them.

These connectors are great for joints that are subject to a lot of stress. And if you need the ability to tighten up a joint from time to time as seasons change, these work great.

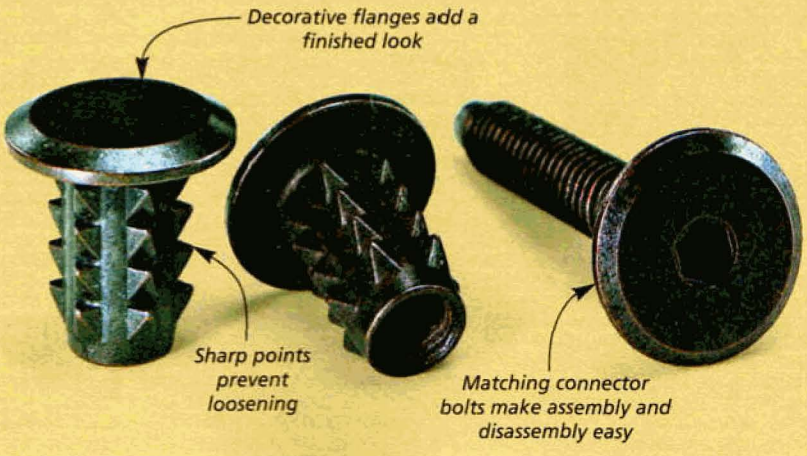

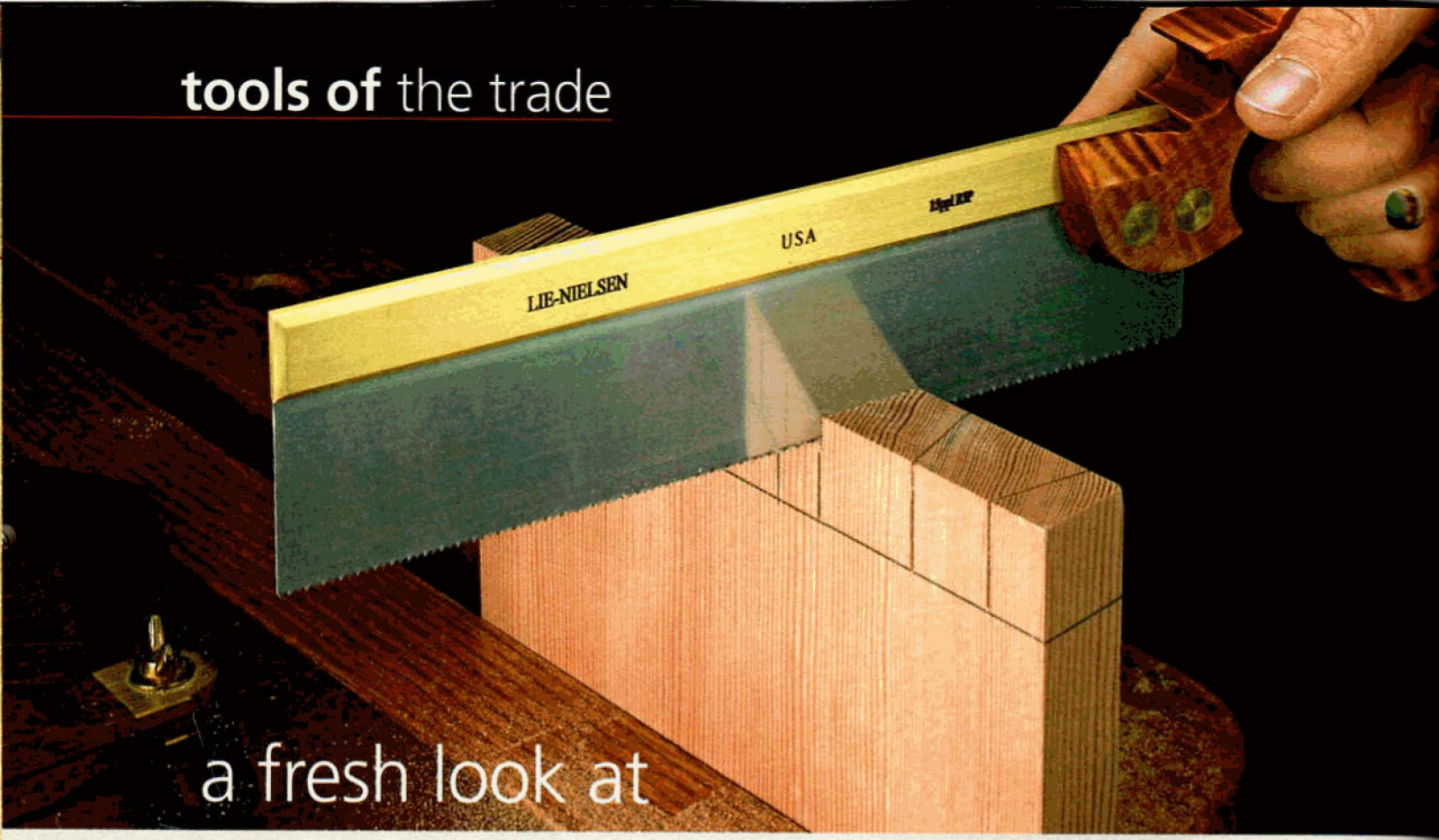

a fresh look at

Western Back Saws

A new breed of back saws will have you rethinking how you feel about hand-cut joinery.

▲ Saws with machined brass backs had the straightest blades and made the best cuts.

My first experience with a Western back saw involved a $10 special from the local hardware store. The saw was hard to get started and would constantly bind in a cut. Following a line for a dovetail was all but impossible. I didn't know if the problem was my lack of skill or the saw. It's still hanging on my wall, collecting dust.

Because of that experience, I was curious about some of the new saws on the market. I decided to find out what the real differences were between my old back saw and higher-quality tools. I was particularly curious about the high-end saws from *Lie-Nielsen* and *Adria*. They were certainly great-looking, but would their performance justify their higher prices?

For comparison, I looked at saws in all price ranges to determine the components that made one saw perform better than another. Here's what I found.

THE BACK. The type of back, or spine, on the saw is your first indication of quality. This spine serves as a stiffener for the blade, allowing manufacturers to use thinner steel. This results in the narrow kerf desired for joinery work. Cheaper saws use a steel spine folded over the blade and secured with small rivets. Mid-range saws use brass attached in the same manner.

The highest quality saws use a brass strip machined to hold the blade. A machined brass back keeps the blade perfectly straight. The folded backs often distort it.

THE BLADE. It goes without saying that a straight blade cuts better

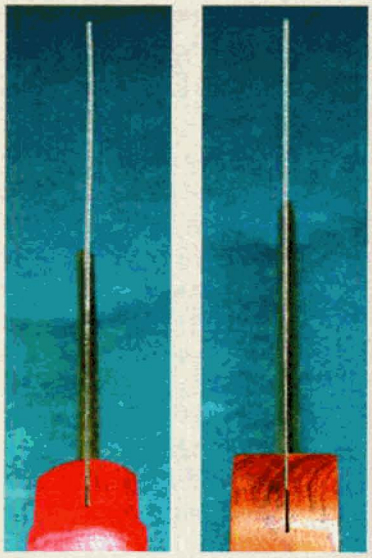

A saw with bends in the blade (left) ► won't cut accurately. It will often bind in the cut and will seldom track a line properly. A perfectly straight blade eliminates both problems and is the key to a high-quality tool.

than a bent blade. But there are a few other things on the blade to look for. If you sight down its length, the teeth should also be in a perfectly flat line. And the "set," the bending of alternating teeth to opposite sides, must be consistent throughout the length of the blade.

All of the less expensive saws I tried had both inconsistent set and less than flat cutting edges. And you'll find that even a very small bend in the blade or variation in set is noticeable when you're trying to make a precision cut. These imperfections cause the saws to bind easily (nearly always, in fact) and make them difficult to start on a line.

THE HANDLE. You can also judge the quality of a saw by looking at its handle. Less expensive saws come in a variety of shapes and sizes, but don't quite feel right in your hand. The top-of-the-line tools have hardwood handles that fit like a glove.

I first believed these were just cosmetic differences. A fancy handle might make a better-looking saw, but it couldn't possibly affect performance. Not true. Those detailed pistol grips on the high-quality saws position your fingers properly to make accurate cuts. When you hold one, you have complete control of the tool. It's balanced and feels like an extension of your hand.

BACK SAW TYPES. Back saws are designed primarily for joinery work. Their names define the tasks they're best suited for. The smaller dovetail saw is designed to cut pins and tails. These cuts require rip teeth. Since cutting a tenon requires both rip cuts (cheeks) and crosscuts (shoulders), most manufacturers offer tenon saws in either tooth pattern.

For most of us, a dovetail saw will take care of most ripping needs and is a "must-have" tool for hand-cut joinery. When coupled with a crosscut tenon saw, you can take on the most complex joints. The crosscut tenon saw is also an ideal choice for the hand miter box.

BOTTOM LINE. For the price of the *Adria* or *Lie-Nielsen* dovetail saw, you can get an entire set of four less-expensive saws. You get what you pay for, however. Expect the differences in manufacturing quality to cause these saws to perform poorly. Many of the cheaper saws we tried would require resetting the teeth before being put to use. Some had bends in the blade and probably could not be salvaged at all.

On the other hand, I found the saws from *Lie-Nielsen* and *Adria* to be dead-on perfect in both set and straightness. They were each well-balanced and a real pleasure to use, right out of the box.

Although the cost of these saws is high, you have to ask yourself if you want a saw to hang on the wall or a reliable tool you can use successfully. For me, the answer is clear. With tools like these available, back saws won't be collecting dust in my shop. They'll be making it.

▲ Adria's ornately carved bubinga handle isn't just for looks. It automatically positions your hand properly for making a cut.

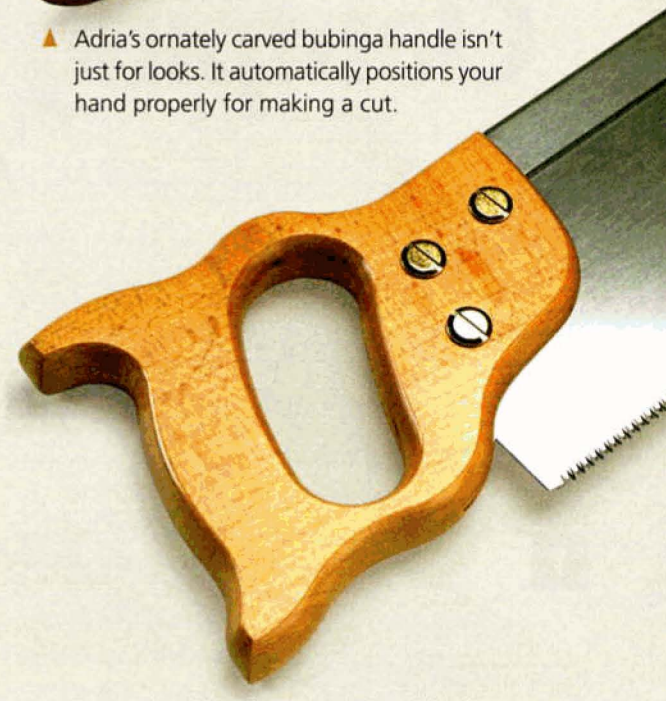

▲ Conventional handles may work well for framing saws, but they don't offer the control needed for fine joinery work.

How-To: Start a Cut

Cutting with a back saw seems like it shouldn't require too much instruction. But if you have trouble starting a cut, you may not be using the right technique.

PROBLEM. A common problem is trying to start a cut on the pull stroke. Pulling the blade just makes it bounce across the surface, scratching out your line.

SOLUTION. Instead, try using the thumb of your other hand to steady the blade and position it on the line. Then, wrap your hand around the handle, not through it (see inset). With no downward pressure, push the saw carefully across the line. If the saw grabs or bounces, lift it just a little bit and keep moving through the line.

Now, you can put your hand in the handle and let the weight of the saw make the cut. This way you'll track a line every time.

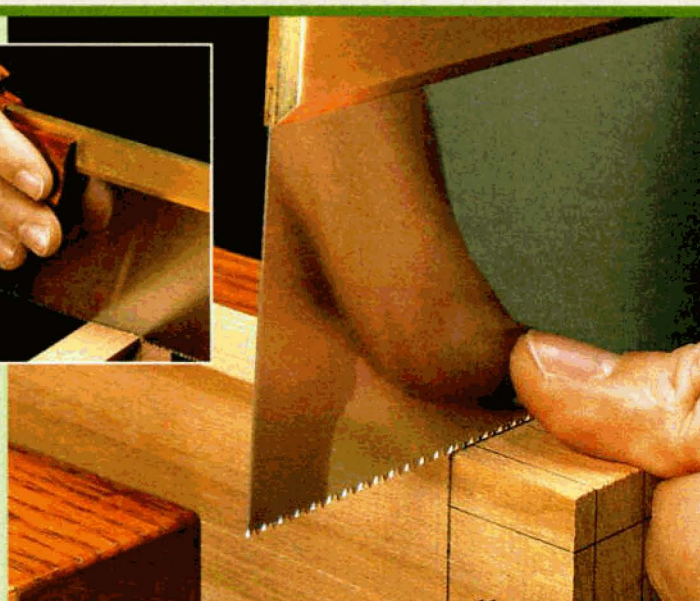

6 solutions for Creative Clamping

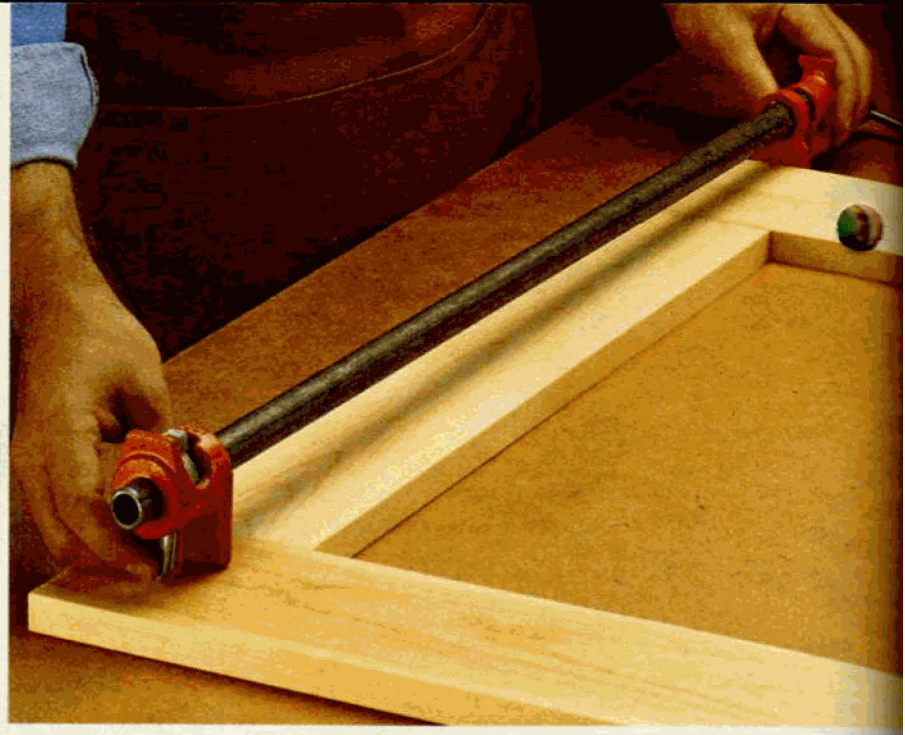

Clamping often presents some real challenges. But with just a few basic materials and a little different perspective, you can solve even your most difficult clamping problems.

1 Clamp Extenders

Few things are more frustrating than getting ready to clamp up a project only to find your pipe clamps aren't long enough. Fortunately, there are a couple of easy solutions to this problem.

The simplest way to extend the reach of your pipe clamps is by adding a pipe coupler to the end of the pipe as shown in Figs. 1 and 1a. Then you can add an extra length of threaded pipe to the end to allow the clamp to reach farther.

Another way is to simply build a T-shaped wood extension, like you see in Fig. 2. It's notched to accept the clamp (see Fig. 2a) so you can pull the pieces together.

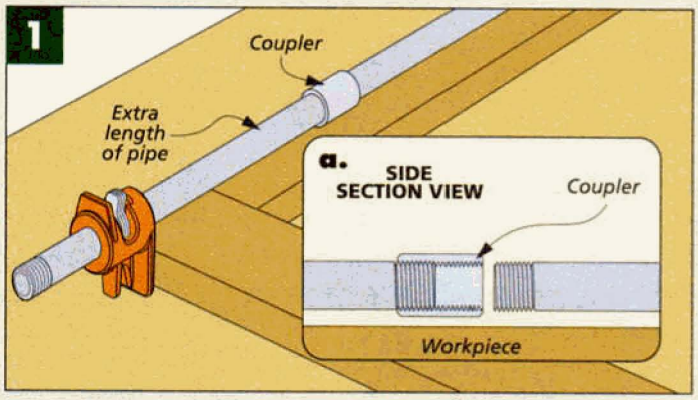

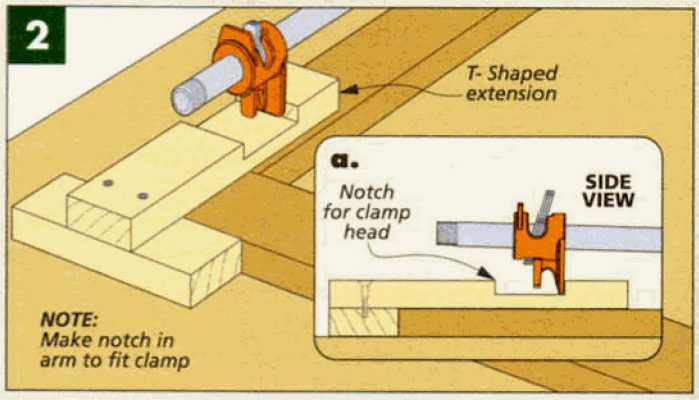

▲ Bungee cord clamps uneven shapes in place.

2 Bungee Cord Clamp

I build a lot of projects (like picture frames) that require built-up molding strips. And because of the profiles, it's difficult to clamp the pieces together without marring the details on the surface of the wood.

For this job, I like to use a bungee cord. These cords can be found in a variety of lengths at most hardware stores and home centers. You can often find them in large spools at the store so you can buy just the length you need. They will easily conform to any shape. And best of all, they won't leave marks on the surface of the wood.

The bungee cord clamp is easy to use. Just wrap it around the molding a few times and tie a knot at the end to hold it in place. (Thicker bungee cords give you more clamping power.)

3 Miter Clamping Blocks

Clamping miter joints always presents a challenge. It's often difficult to securely hold the joint in position. But you can quickly build a pair of clamping blocks that will let you use your bar clamps to make it easier to get the job done.

Start by making a couple of angle blocks, like you see in Fig. 1. These are simply small triangles cut from a block of wood at 45°. Then each block is glued and screwed to a strip of hardboard.

It's important that the clamping blocks don't slip when you tighten the clamp. So I like to attach a piece of adhesive sandpaper to the strip to provide some friction.

Using the clamping block is easy. Just clamp one of the hardwood strips to each workpiece. Then you can simply place a bar clamp across the two blocks and use it to draw the joint together securely, as shown in Fig. 2.

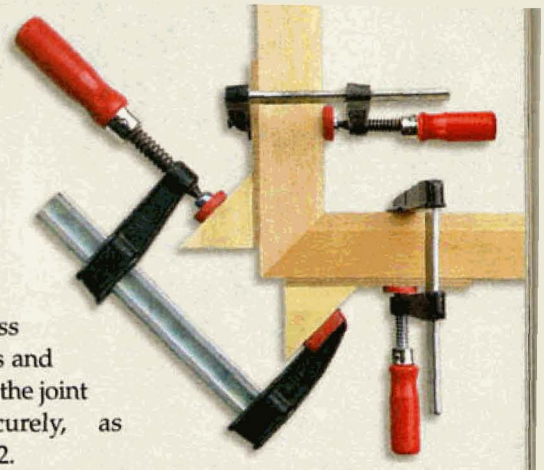

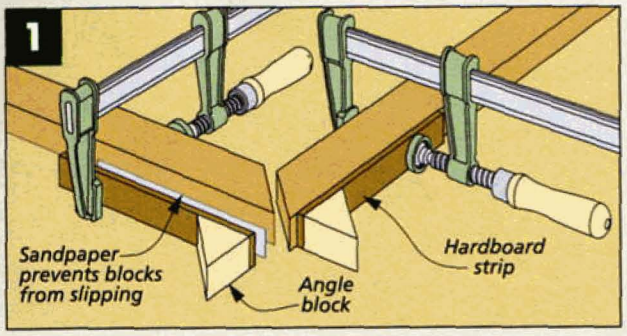

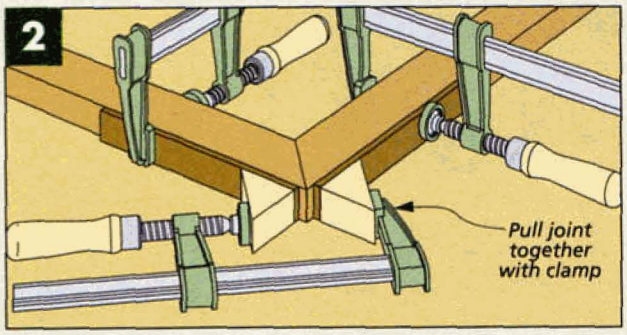

4 Corner Squaring Block

Every time I assemble drawers, I need an extra pair of hands — one to hold things in place and another to apply the clamps. This is where a few simple squaring blocks come in handy.

The base of each block is just a square piece of ¾" plywood. A top layer of three separate pieces of plywood is added to the base, like you see in the drawing and detail 'a' below. Just be sure you glue these three pieces down squarely to the base so the space between each of them matches the thickness of the workpieces you'll be clamping.

To use the squaring blocks, place one block under each corner. Then add the clamps and tighten them to pull the pieces together.

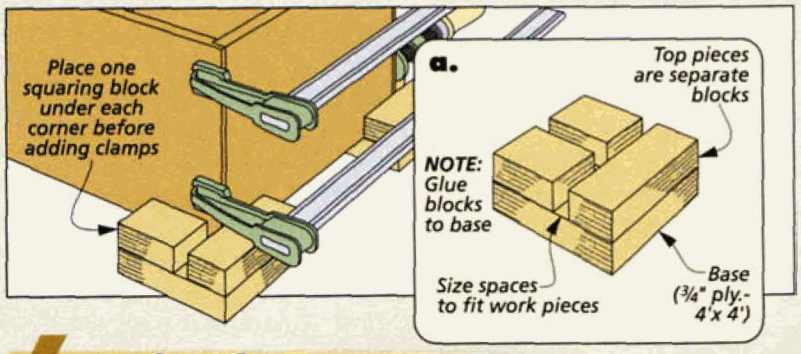

5 Tape Edge Clamp

Clamping edging to a shelf that's already attached to a project can be difficult. There's no good way to position the clamps to get adequate clamping pressure.

A simple solution is masking tape. Just apply a few strips of tape, like you see in the drawing below. Pull the tape tightly around the edging for a solid glue joint.

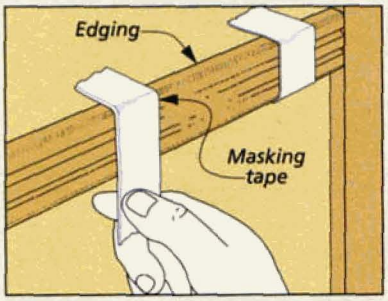

6 Wedge Clamp

Another way you can hold edging in position is to use a wedge. This is helpful when you don't have enough clamps or your clamps aren't long enough.

To do this, you'll need a few small C-clamps and some wood wedges. First, attach the C-clamp to the edge of the shelf, table, or counter-top. (Use a hardwood pad under the jaws to protect the surface). I space them about 6" apart.

After the clamps are secured in place, you can then slip the wedge against the edging until it contacts the C-clamp as shown in the photo at right. Finally, lightly tap the small wedge with a mallet until it wedges under the clamp with the desired amount of pressure. W

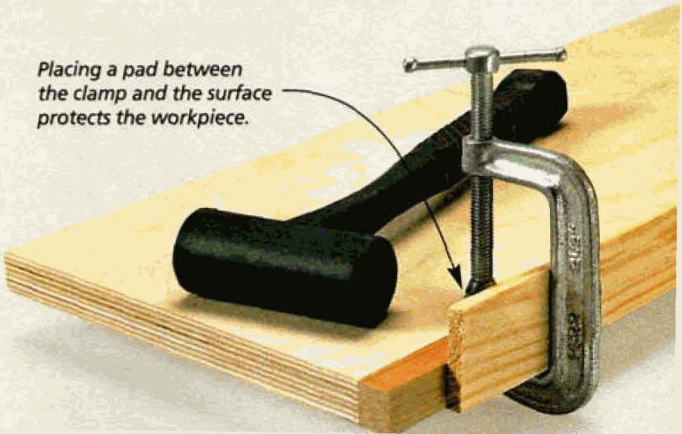

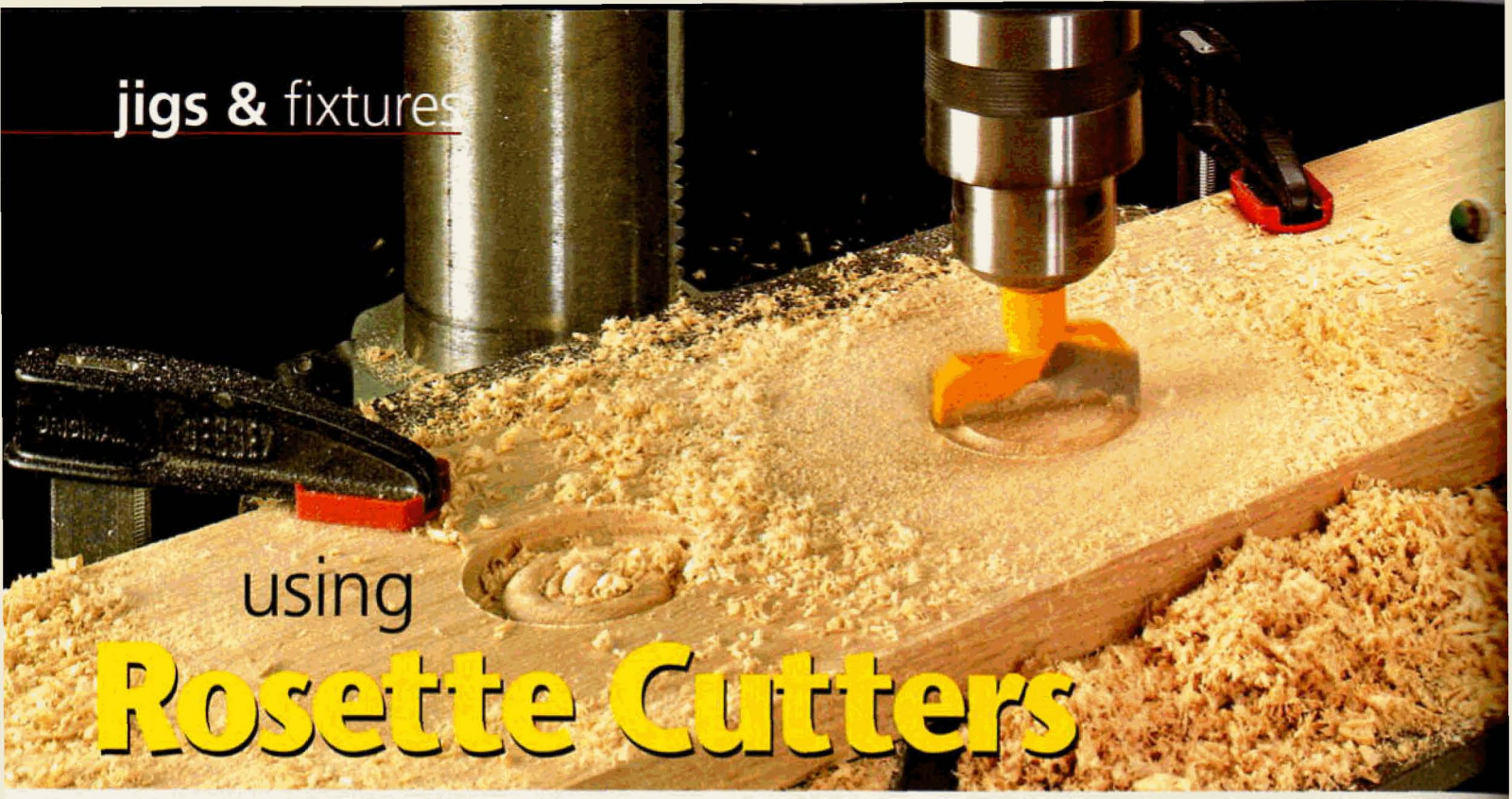

using Rosette Cutters

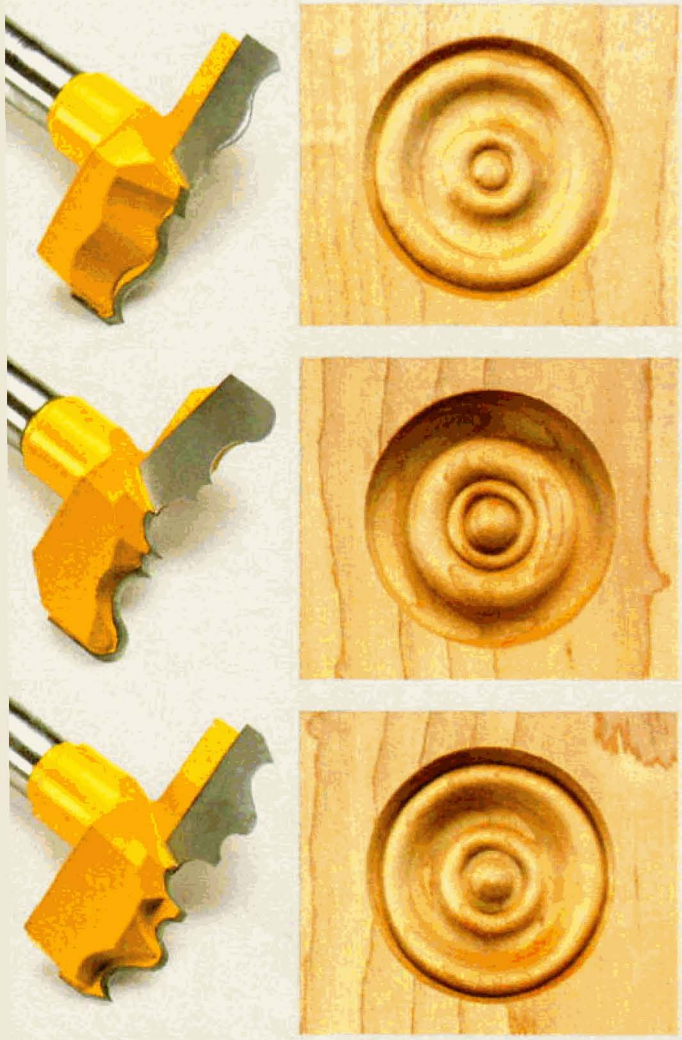

▲ Rosette cutters are available in a number of different profiles, ranging from simple to complex. Most profiles are between 2" and 2¼" in diameter.

Whether you're making rosettes for the trim around a doorway or to dress up a project, these special-purpose cutters are the way to go.

Rosettes are decorative elements that are usually cut into corner blocks and used around doorways and windows (see photos at left). But they can also be used on furniture projects. Although you could turn rosettes from scratch on a lathe, a rosette cutter is faster and will give you more consistent results.

Rosette cutters are one of those things that you may have always wanted to try — but just never had a good reason to. Granted, they're a pretty specialized tool. But there's something kind of fascinating about watching one turn out a perfectly shaped rosette in just seconds, right before your eyes.

At first glance, a rosette cutter looks like an oversize router bit. Like router bits, most rosette cutters are carbide-tipped and feature a complex profile, almost like a large, panel-raising bit. But these bits are designed for use in a drill press rather than a router. That's because with a rosette cutter, the workpiece remains stationary and the cutter is brought into contact with the wood. You simply chuck the rosette cutter like you would a drill bit and then lower the feed handle of the drill press to bring the spinning cutter down onto the workpiece (see photo above).

PROFILES. Rosette cutters are available in several different profiles. Most of these are between 2" and 2¼" in diameter, so choosing one is really just a matter of deciding which profile you like the best. There is one thing to be aware of though. If you're working with thin stock (less than ¾"), you'll want to select a fairly shallow profile (like the one on the top at left) so that you don't cut through your stock.

USING A ROSETTE CUTTER

Using a rosette cutter isn't difficult, but it takes a little getting used to. Because they are fairly large and

heavy, using one for the first time can be a little intimidating. They make a heck of a racket. And the size and mass of the cutter can set up some serious vibrations. For safety's sake, there are a few things to be aware of. Knowing these will also help you get the best results.

SETUP. To start with, you should always make sure your workpiece is firmly clamped to the drill press table. Rosette cutters don't have a centerpoint to guide them. Because of this, they tend to grab the wood as they cut. If you try to hold the workpiece by hand, or if you don't have it securely clamped down, the cutter will grab it and fling it off the drill press table. (Trust me on this.)

Trying to clamp a small block of wood down to a drill press can be a challenge. So if you're making square rosette blocks (like for trimming out a door or window), you'll find it easier to cut the rosettes in a longer piece of stock first and then cut the individual blocks to size (see box in margin at right).

SPEED. In addition to holding the workpiece securely, the other thing you'll need to pay attention to is the drill press speed. Carbide-tipped rosette cutters can be run at medium to high drill press speeds — 2000 to 3000 rpm. In fact, I found that I got a slightly cleaner cut when using higher speeds. But if you're using a rosette cutterhead with interchangeable steel knives (see box below), you'll have to slow your drill press way down — to 350 rpm maximum.

CHATTER. Aside from safety issues, the real challenge when using a rosette cutter is getting smooth results. Despite their name, rosette cutters actually do more scraping than cutting. Because of this, it's pretty common to experience some chatter when using one. If this happens, back off on your feed rate a bit to take a smaller "bite."

And because the rosette cutter is traveling in a circular motion, you can't avoid cutting through at least some end grain. If you're working with an open-grain wood like oak, some tearout is almost inevitable. Tighter-grained woods like maple and cherry seem to yield crisper results. But no matter what type of wood you use, plan on doing a little bit of sanding to clean up any rough spots, particulary on the end grain.

A rosette cutter is not a tool that you're likely to reach for regularly. But after trying one once, you just may find yourself looking for new excuses to start using it on your future projects.

How-To: Rosette Blocks

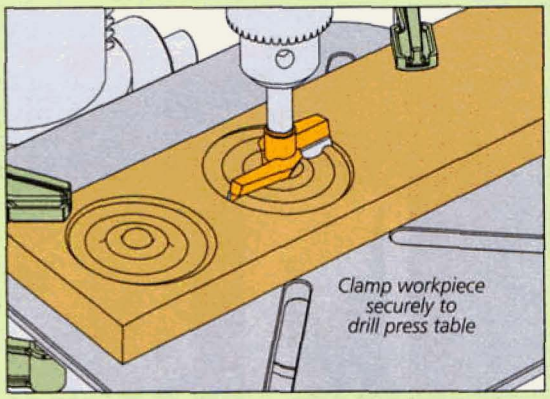

Clamp it Down. *To make rosette blocks, cut several rosettes in a long blank. The extra length allows you to clamp the blank securely to your drill press table.*

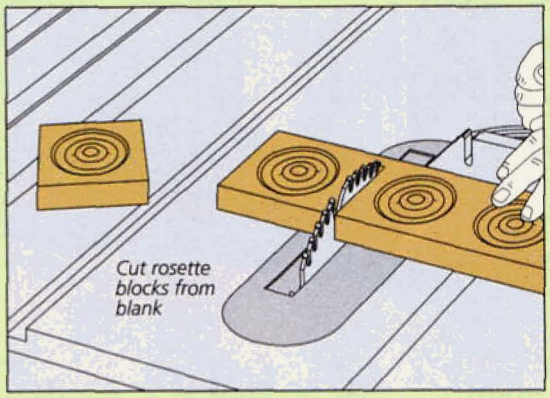

Cut the Blocks to Size. *After making all the rosettes, take the blank over to the table saw and cut the individual rosette blocks down to final size.*

7-in-1: Rosette Cutterhead

A typical, carbide rosette cutter like those shown on the opposite page costs about $50 — a lot of money for a one-trick pony that's only capable of making a single profile. But for the cost of two carbide rosette cutters, you can buy a rosette cutterhead and seven different interchangeable knives, like the ones shown at right. (See page 49 for sources.)

Designed to be used in a drill press, this cutterhead allows you to cut a variety of rosette profiles by simply swapping out the knife. The knife is held in place by a gib, just like a jointer or planer knife. All you have to do is tighten a few Allen screws to lock the knife in place (see inset photo).

There are a couple of key differences between a cutterhead and fixed-blade cutter. One is that because of their weight and design, rosette cutterheads have to be run at a slower speed — 350 rpm maximum.

The second major difference is that the knives are steel, not carbide. So they will dull quicker. (But they can be resharpened.) And if you're only making a few rosettes, this shouldn't be a problem.

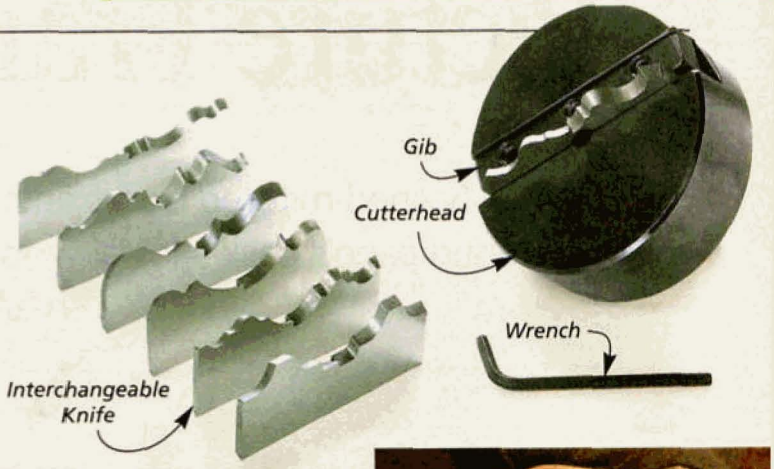

With this cutterhead and set of knives, you can make seven different styles of rosettes by simply switching out one knife for another. The cutterhead chucks into a drill press just like a single-profile cutter.

heavy, using one for the first time can be a little intimidating. They make a heck of a racket. And the size and mass of the cutter can set up some serious vibrations. For safety's sake, there are a few things to be aware of. Knowing these will also help you get the best results.

SETUP. To start with, you should always make sure your workpiece is firmly clamped to the drill press table. Rosette cutters don't have a centerpoint to guide them. Because of this, they tend to grab the wood as they cut. If you try to hold the workpiece by hand, or if you don't have it securely clamped down, the cutter will grab it and fling it off the drill press table. (Trust me on this.)

Trying to clamp a small block of wood down to a drill press can be a challenge. So if you're making square rosette blocks (like for trimming out a door or window), you'll find it easier to cut the rosettes in a longer piece of stock first and then cut the individual blocks to size (see box in margin at right).

SPEED. In addition to holding the workpiece securely, the other thing you'll need to pay attention to is the drill press speed. Carbide-tipped rosette cutters can be run at medium to high drill press speeds — 2000 to 3000 rpm. In fact, I found that I got a slightly cleaner cut when using higher speeds. But if you're using a rosette cutterhead with interchangeable steel knives (see box below), you'll have to slow your drill press way down — to 350 rpm maximum.

CHATTER. Aside from safety issues, the real challenge when using a rosette cutter is getting smooth results. Despite their name, rosette cutters actually do more scraping than cutting. Because of this, it's pretty common to experience some chatter when using one. If this happens, back off on your feed rate a bit to take a smaller "bite."

And because the rosette cutter is traveling in a circular motion, you can't avoid cutting through at least some end grain. If you're working with an open-grain wood like oak, some tearout is almost inevitable. Tighter-grained woods like maple and cherry seem to yield crisper results. But no matter what type of wood you use, plan on doing a little bit of sanding to clean up any rough spots, particulary on the end grain.

A rosette cutter is not a tool that you're likely to reach for regularly. But after trying one once, you just may find yourself looking for new excuses to start using it on your future projects. W

How-To: Rosette Blocks

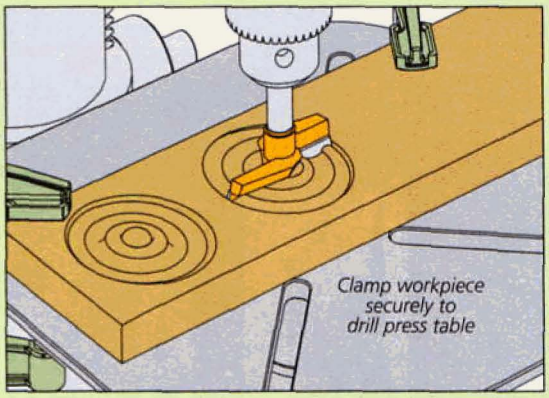

Clamp it Down. *To make rosette blocks, cut several rosettes in a long blank. The extra length allows you to clamp the blank securely to your drill press table.*

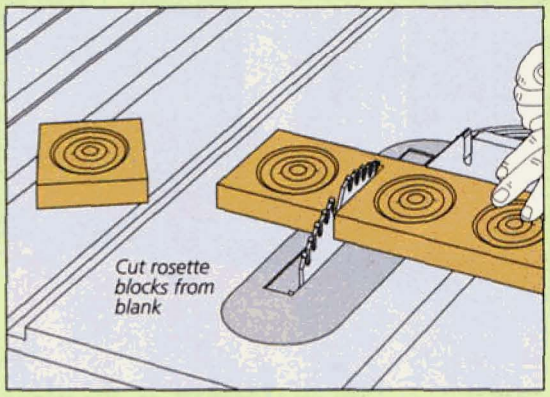

Cut the Blocks to Size. *After making all the rosettes, take the blank over to the table saw and cut the individual rosette blocks down to final size.*

7-in-1: Rosette Cutterhead

A typical, carbide rosette cutter like those shown on the opposite page costs about $50 — a lot of money for a one-trick pony that's only capable of making a single profile. But for the cost of two carbide rosette cutters, you can buy a rosette cutterhead and seven different interchangeable knives, like the ones shown at right. (See page 49 for sources.)

Designed to be used in a drill press, this cutterhead allows you to cut a variety of rosette profiles by simply swapping out the knife. The knife is held in place by a gib, just like a jointer or planer knife. All you have to do is tighten a few Allen screws to lock the knife in place (see inset photo).

There are a couple of key differences between a cutterhead and fixed-blade cutter. One is that because of their weight and design, rosette cutterheads have to be run at a slower speed — 350 rpm maximum.

The second major difference is that the knives are steel, not carbide. So they will dull quicker. (But they can be resharpened.) And if you're only making a few rosettes, this shouldn't be a problem.

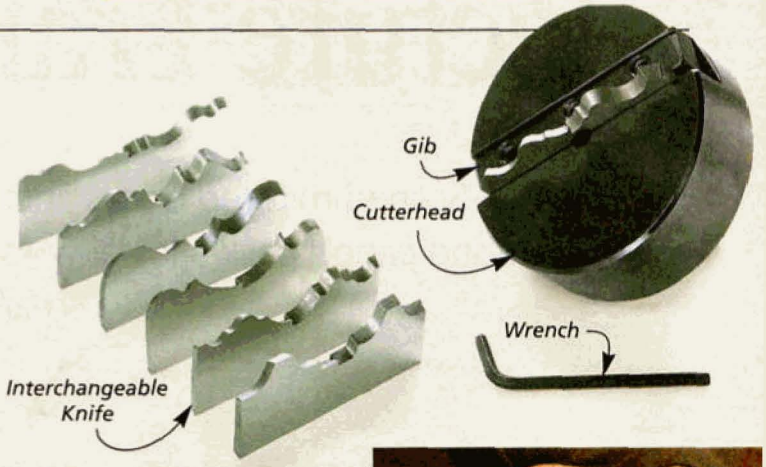

With this cutterhead and set of knives, you can make seven different styles of rosettes by simply switching out one knife for another. The cutterhead chucks into a drill press just like a single-profile cutter.

fold-out Picture Frame

Splined mitered doors and miniature raised panels pack a lot of woodworking into a small package.

▲ Open or closed, this picture frame presents an attractive view from any angle.

Whether it's the family, the dog, a vintage car, or a prize-winning bass, most of us have a favorite photo or two to display on a desk. One thing I've never been happy with, though, is most desktop frames aren't very attractive from the back.

This desktop frame solves that problem by using removable raised panels as a backing for the photos. This frame looks great from any angle, whether open or closed.

Even though it's small, you'll have a chance to learn a few things you can apply to larger projects, including some table saw techniques that will improve your ability to do precision joinery. With one easy-to-build jig and a few simple setups, you'll add splined miters to strengthen the frames. And you won't need to worry about installing tiny hinges. These doors are mounted on pins instead.

Even the raised panels won't take too much time to build. They're made on the table saw as well, using an easy four-step process.

CONSTRUCTION DETAILS

OVERALL DIMENSIONS:
12 7/16"W x 3"D x 9 1/8"H

NOTE: *All pieces are ¾"-thick*

NOTE: *Bottom is attached with screws to allow for installation of doors*

Splines add strength to mitered frame and doors. See page 19 for an easy-to-build table saw jig for cutting the slots

Doors pivot on steel pins

Acrylic panels fit into rabbeted doors. The raised panels lock them in position

Beveled edges of the top and bottom pieces complement the raised-panel doors

Brass washers create gap at bottom of doors to match top gap and provide clearance for opening

▲ The miniature raised panels easily slide into position, holding your photos in place. They're made with just a few simple cuts at the table saw.

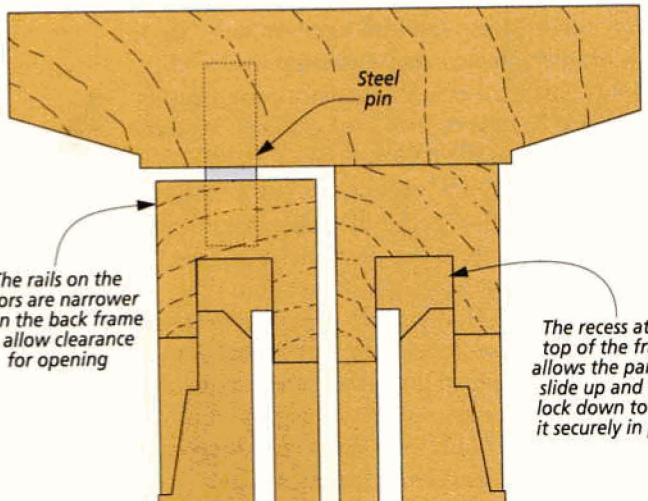

making the BACK FRAME

As I mentioned earlier, this project requires a little bit of precision to build, but it's really not too difficult. You start by building a stationary back frame. Later you'll add a base, top, and a pair of swinging doors.

START WITH THE BACK FRAME. As you can see in the photo at left, each piece of the back frame has a different profile. The top rail has a deeper groove to allow the raised panel and acrylic to be inserted and then dropped into the shallower groove in the bottom rail. The stiles are rabbeted, leaving a lip in front to hold the acrylic.

You can cut these grooves at the table saw by making a few passes with a regular blade. The detailed dimensions for each piece are shown in the boxes at right. Start with pieces rough-cut to length, then trim them to final length after making the grooves. Since narrow pieces like these can easily catch in the throat plate of the saw, I like to use a zero-clearance insert for these cuts.

To cut the grooves, raise the blade to the depth of the groove and set the fence 3/16" from the blade. Make your first pass and then flip the stock end for end and make a second pass to center the groove and define its width. Next, move the fence another 1/8" away from the blade and repeat the cuts to remove the remaining waste.

For safety and accuracy, I cut the rabbeted stiles using an auxiliary fence at the table saw. Since the rabbet is only 1/8" wide, you can lay these pieces on edge, set the blade height, position the auxiliary fence against the blade, and make the cut.

Now you can miter the pieces and dry-fit the frame. I used a rubber band to hold it together while I measured for the tenons on each end of the divider. Detail 'c,' at right, shows the dimensions of theses tenons.

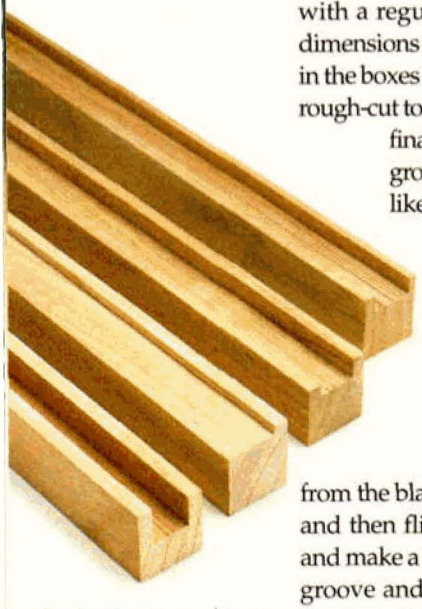

▲ The frame pieces are all the same thickness and width, but each requires different cuts to form the grooves to hold the acrylic, your photos, and the panels.

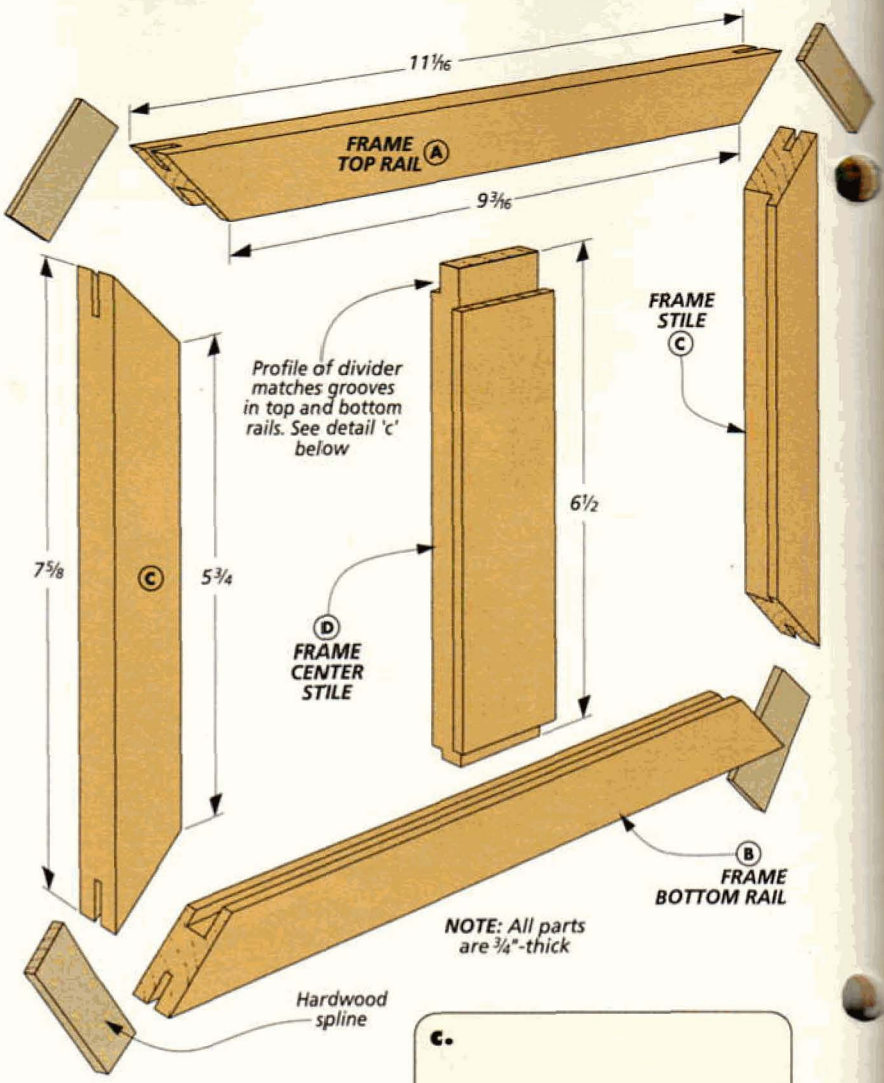

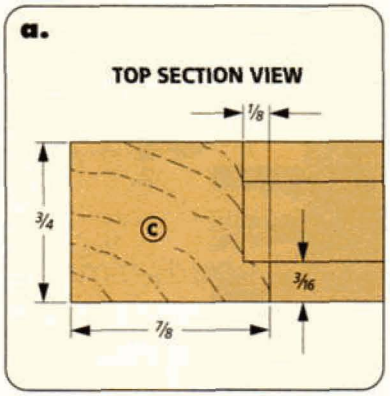

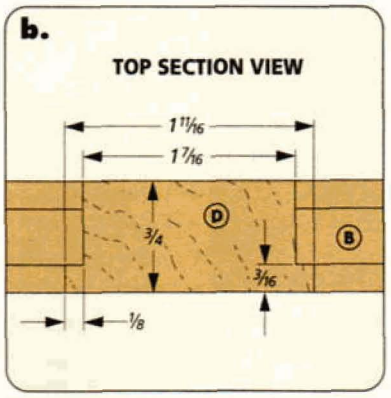

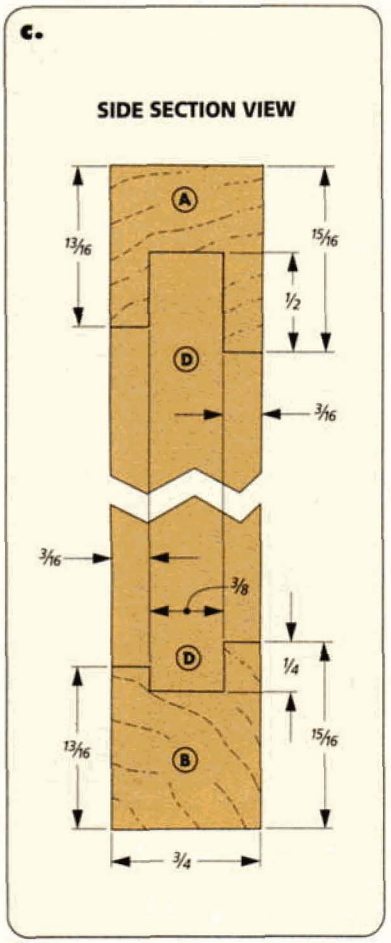

THE DIVIDER. The divider is the trickiest part of the project. It requires a rabbet on both edges and a different tenon on each end to fit into the grooves in the top and bottom rails. I cut the piece to length and width, then cut the rabbets using the same table saw setup as the stiles.

By dry-fitting the frame next, you can make accurate layout marks on the stock and sneak up on the cuts. This way you can get a more precise fit without any gaps.

With the divider complete, you can glue up the assembly. When the glue has dried, use the jig and procedure shown at the bottom of the page to cut the slots in each corner.

Splines add significant strength to the miters. This end-grain to end-grain glue joint is likely to fail over time without this reinforcement.

The splines themselves are nothing more than thin strips of stock planed or sanded to match the thickness of your cut. Remember that the grain must run lengthwise, as shown below, to provide strength.

You can use the steps in Fig. 1 to install and trim the splines.

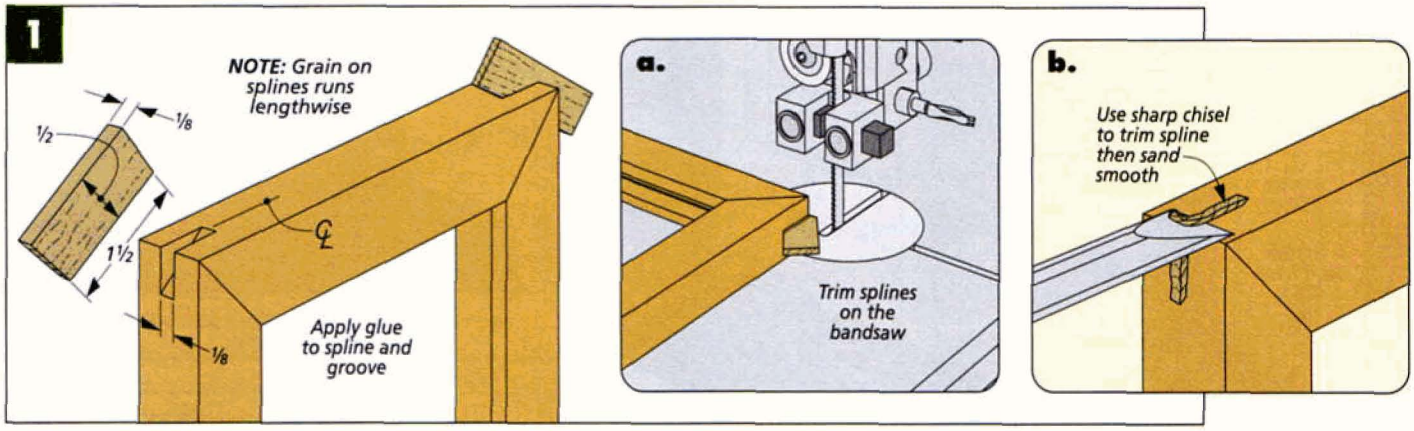

How-To: Making Splined Miters

Adding a spline to a miter joint increases the strength of the end-grain glueup. It's also easy to do on the table saw. All you need is a jig like the one shown below. It holds the frame at an angle to the saw blade to cut a slot across the joint.

The jig isn't complicated either. It's just a carriage that fits over your rip fence with a pair of cleats at a 90° angle on one face.

I like to use two spacers to hold the assembly together because they increase the stiffness of the jig. This helps prevent racking as you slide it along the fence of your saw. The cleats hold the frame, providing a clamping surface to lock it in position.

I attached the cleats with screws only — no glue — so I could tweak the angle. It also makes it easy to replace them when they wear out.

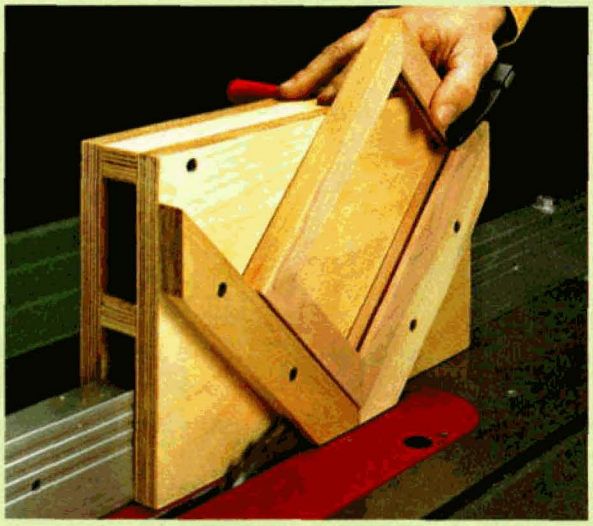

▲ This shop-made splined-miter jig guarantees accurate and repeatable cuts. It's also versatile enough to accomplish mitered spline cuts on stock of any size.

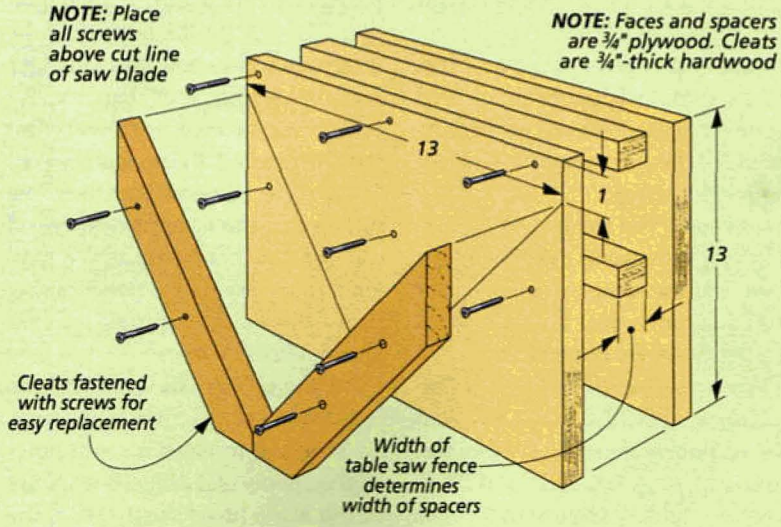

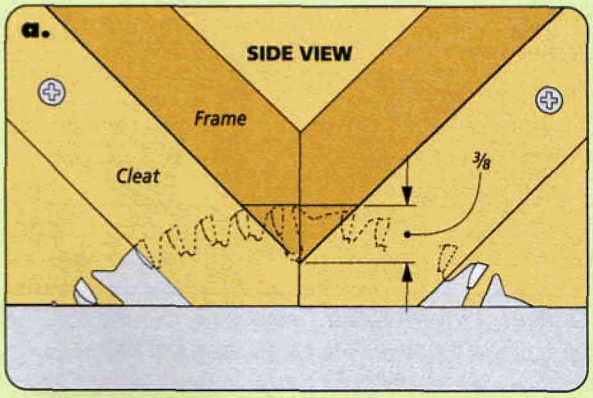

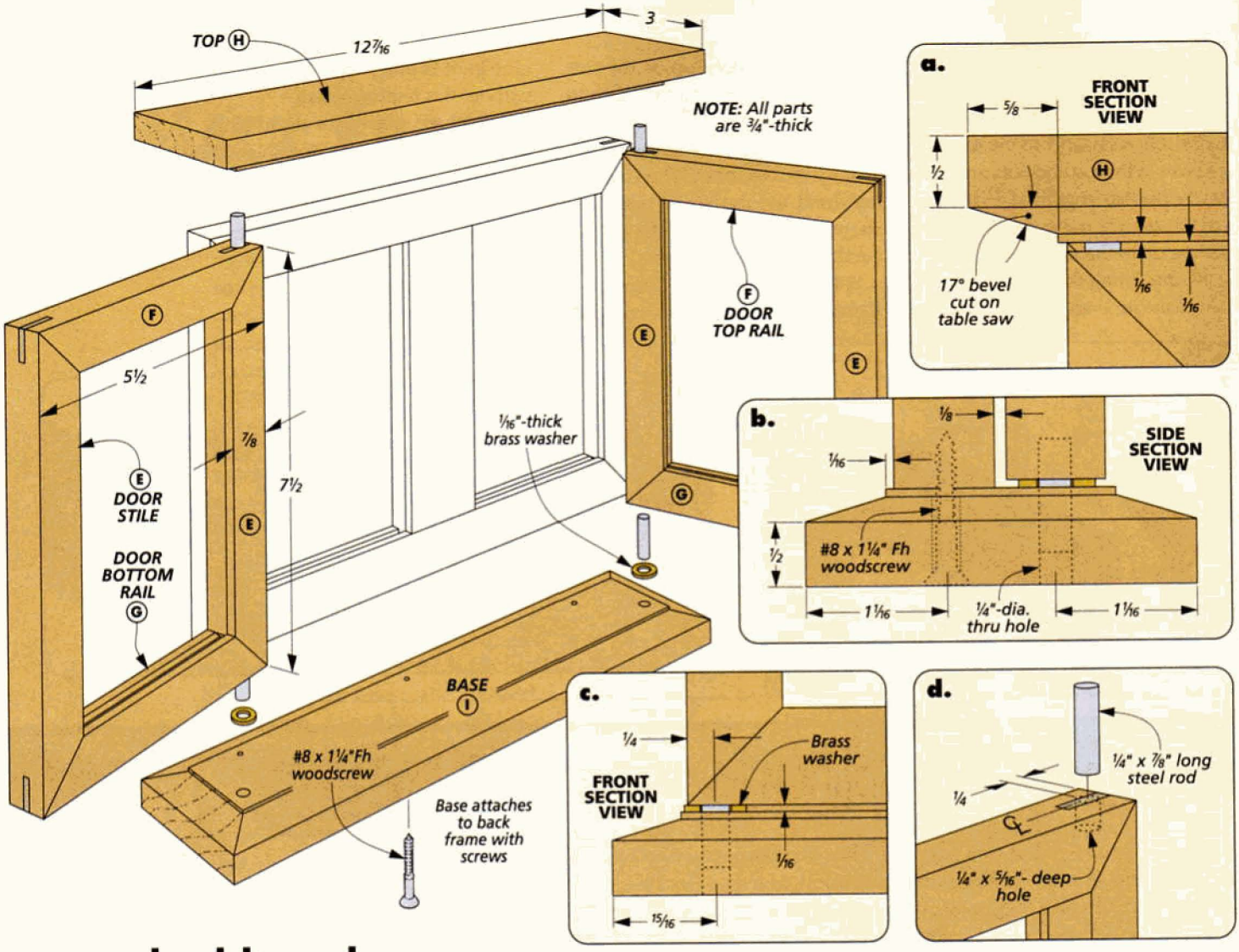

building the DOORS AND PANELS

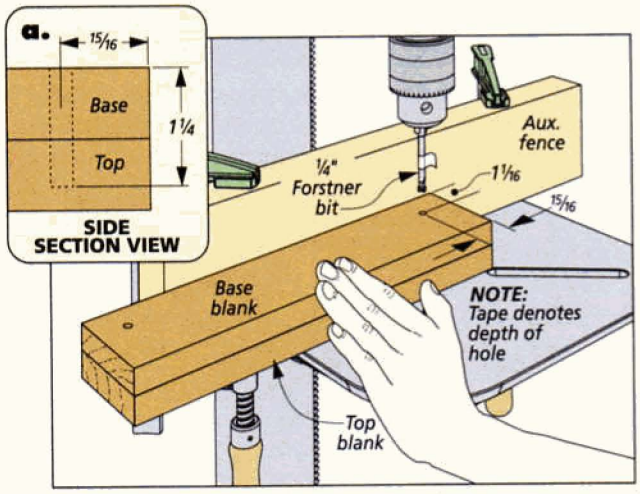

Drilling Uniform Holes. *Temporarily join the top and base pieces together with carpet tape and drill holes for the pins. Set the depth as shown in detail 'a.'*

With the back frame complete, you can begin work on the doors. Because the doors pivot on pins, there are no small hinges to fit. I used some simple techniques to keep the holes for the pins aligned. The rest is straightforward.

THE DOORS. The techniques for cutting the grooves and assembling the doors are the same as you used for the back frame. Just note the slight differences in the dimensions.

When you've finished assembling and sanding the doors, the next step is to accurately drill holes for the pins. To do this, I used a tall fence and stop block on the drill press to make sure the holes were exactly centered and vertical. Detail 'd' above shows the correct placement of the holes.

CUTTING RAISED PANELS. The panels not only give this picture frame a great look, but they also hold the acrylic panels and your photographs in position. The box on the bottom of the next page shows how you can make them in a simple, four-step process.

To provide a consistent reveal when they're installed, the panels start out at 4 1/4" wide, 1/4" wider than their final dimension. You'll need to trim 1/8" off each side (but not the top and bottom) after you've made the panel-raising cuts, so they'll fit snugly into the grooves in the frames.

TOP AND BOTTOM. The base and top are identical pieces cut from 3/4" stock. To keep the top and bottom holes aligned perfectly, I drilled both pieces at the same time, as shown in the

illustration at left. This leaves a through-hole in the base, but you can fill it with a plug after assembly if you want to. You'll need to control the hole depth, as shown in detail 'a' at the bottom left of the opposite page.

To complement the look of the raised-panel doors, I added a bevel on all four edges of both the top and bottom pieces. It's just an angled cut made on the table saw, similar to the panel-raising technique.

PUTTING IT ALL TOGETHER. After a final sanding, you're now ready to move on to the assembly. The best way to begin is to glue and clamp the top to the back frame. Spring clamps work well here. When the glue has dried, you can drill and countersink holes in the base piece for the screws that will attach the bottom to the frame.

With the pins installed in the doors, you can place them into the top and bottom, checking for square. A small brass washer on the pin in the bottom of each door will guarantee even spacing. Next, you can screw the base on to the back frame.

The last step is to make some clear panels to cover your photos. I used 0.1"-thick acrylic because it's widely available, cuts cleanly at the table saw, and doesn't scratch easily.

When it's all together, you'll have the perfect place to hold your most prized photos. Don't be surprised if everyone you know starts asking for a desktop frame of their own.

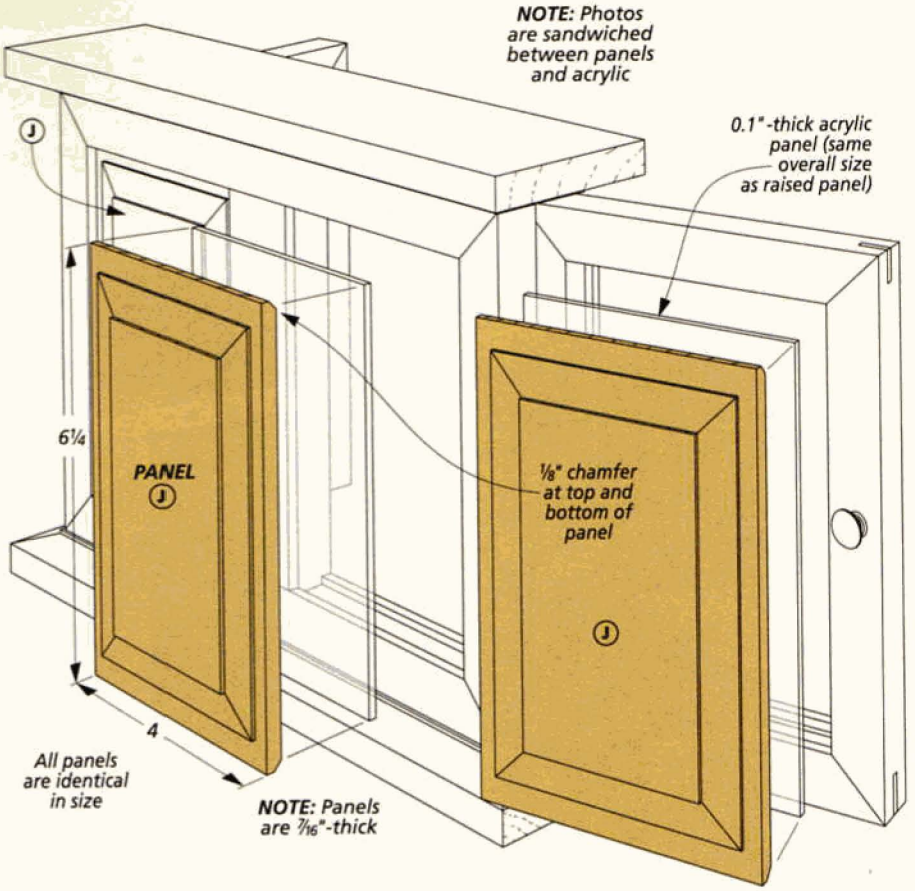

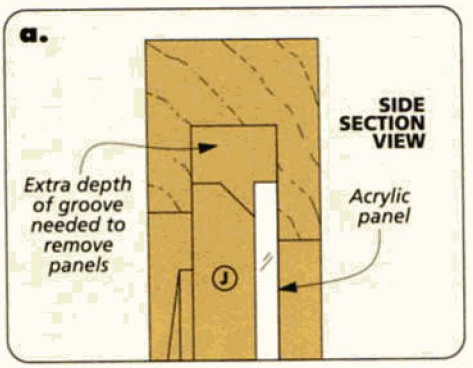

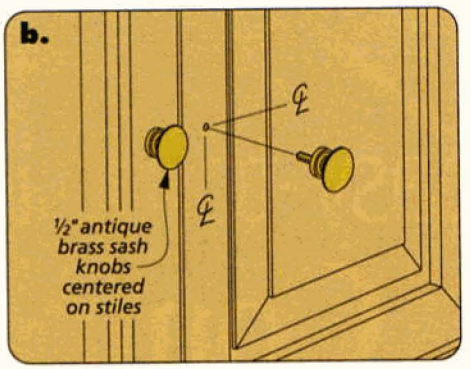

How-To: Raised Panel Details

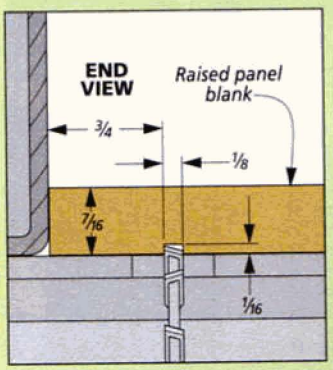

Make Scoring Cuts. *Define the field of the raised panel with 1/16"-deep cuts on the top, bottom, and both edges.*

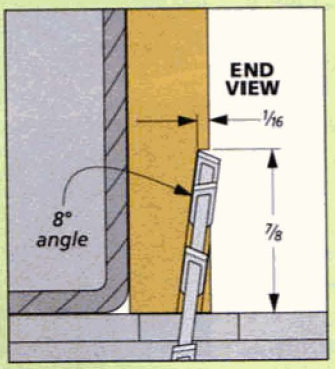

Raise the Panel. *With the blade set at 8° and the panels on edge against the fence, cut to the scored lines.*

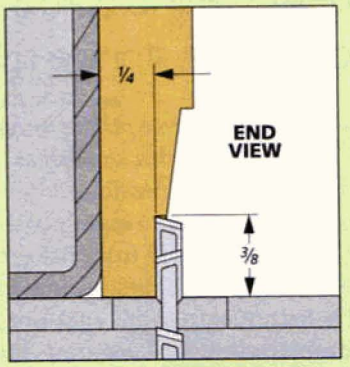

Cut the Reveal. *Make one final pass with the blade set at 0° to flatten the edges so they'll fit into the grooves in the frame.*

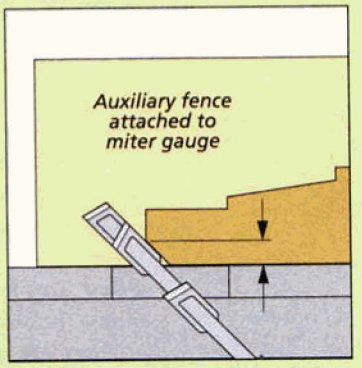

Chamfer the Ends. *Set the table saw blade to 45° and use an auxiliary fence on the miter gauge to put a small chamfer on each end.*

easy-to-build Compact Desk

It won't take you long to build this desk and add some extra storage space.

It seems that some of the best projects are the simplest to build. And that's the case with this small desk. It's about as clean and straightforward as possible.

Part of what makes it so easy to build is the materials I used. Most of the desk is made from Baltic birch plywood. Unlike typical plywood, Baltic birch is made of many, thin layers that create a solid, void-free edge.

Then for a dramatic touch, I covered most of the exposed plywood panels with plastic laminate. Besides adding color, the laminate is easy to clean and will stand up to years of use without a scratch. I'll show you a few tips for working with it later on.

▲ You can build the desk as shown above or, for an even cleaner look, you can add a pair of doors to the front. An optional stand raises a monitor to a comfortable height. See page 29 for the details.

CONSTRUCTION DETAILS

OVERALL DIMENSIONS:
48"W x 27"D x 30"H

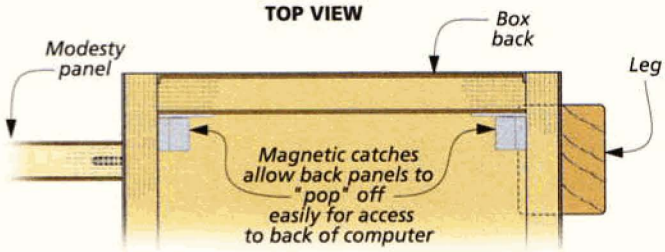

Plastic grommet provides access for computer cords

Rigid desk top made from two layers of plywood with laminate on both faces

Plastic laminate on exposed faces creates hard-wearing, easy-to-clean surfaces

Modesty panel strengthens desk and keeps it from racking

Chamfer softens desk edges

Plastic laminate on false front

Full-extension drawer slides

Adjustable shelves slide over concealed shelf support pins

Drawer features same rabbet joinery as cases

For hardware sources, turn to page 49

For tips on working with plastic laminate, turn to page 25

Desk cases are built with simple, rabbet joinery reinforced with screws

FRONT VIEW

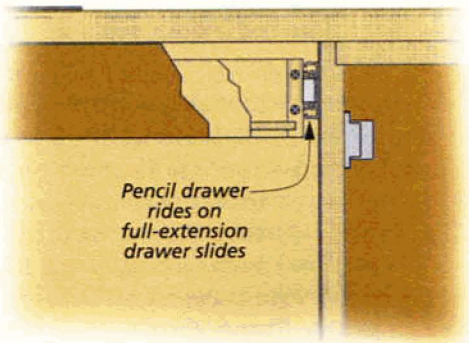

Two-piece hardwood legs wrap under cases

TOP SECTION VIEW

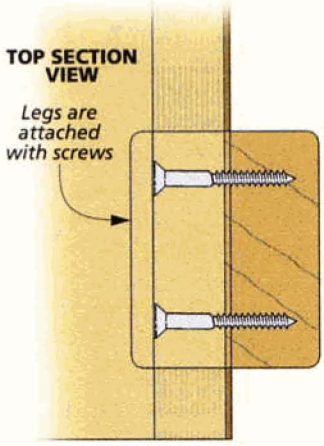

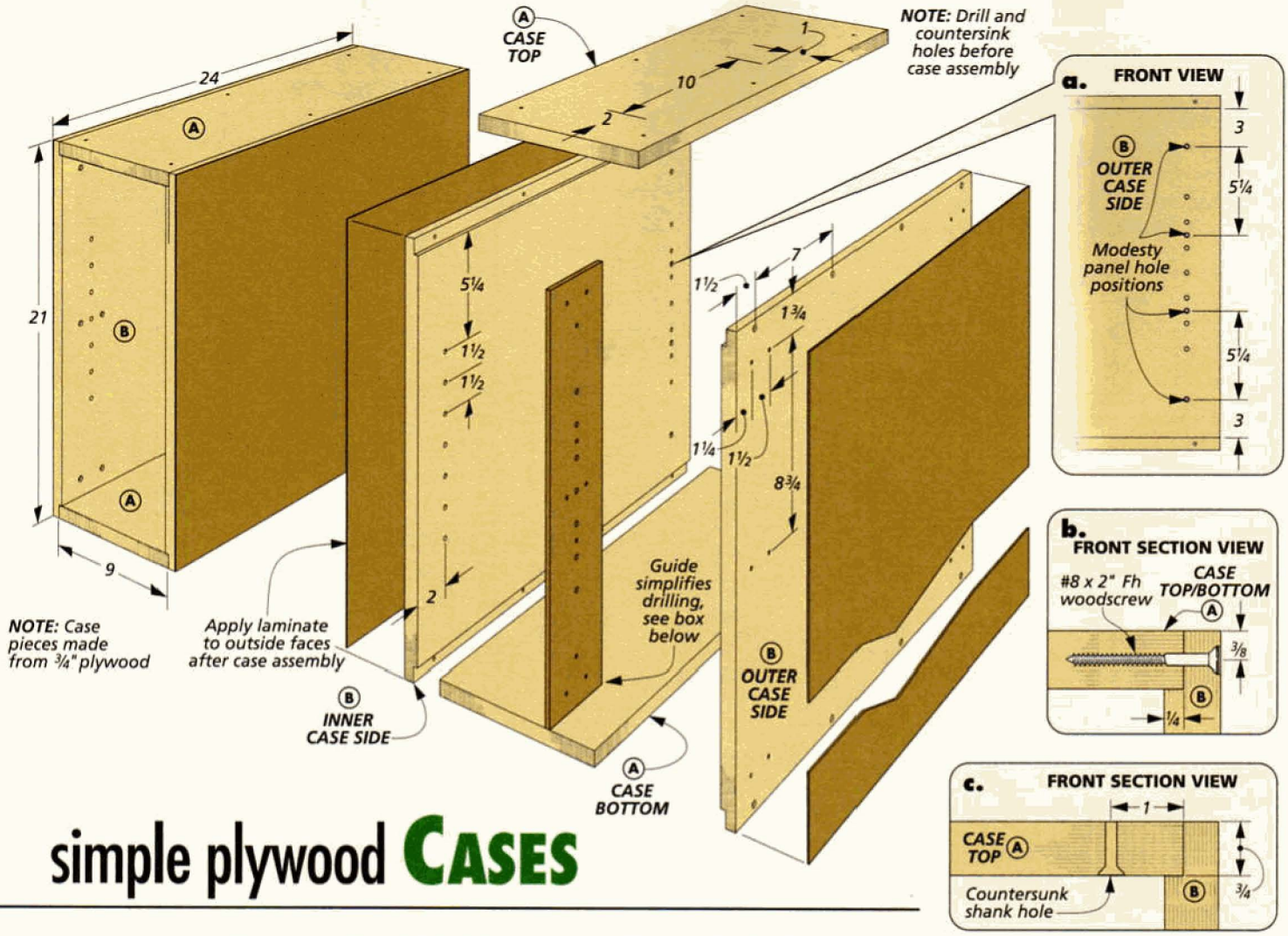

simple plywood **CASES**

I began building the desk by making the side cases. Later on, the legs and the desk top will be attached to them to create a sturdy framework.

JOINERY. Basically, the side cases are two plywood boxes that are rabbeted together. The rabbets are cut in the case sides and are sized to hold the top and bottom, as in detail 'b.' The joints will be reinforced with screws to create a solid assembly.

DRILLING HOLES. With the joinery wrapped up, it's a good idea to drill several sets of holes that will be needed later. I drilled these now because once assembled, the cases will be too narrow for a drill.

The first set of holes is some countersunk shank holes in the case top. These will be used for attaching the desk top. You can find the dimensions for these in the drawing above.

The remaining holes are drilled in the case sides. Some are sized for shelf support pins. The others are for attaching the legs and a plywood panel called a "modesty panel" that connects the two cases.

Since there are so many holes, I made a drilling guide, as shown in the box at left. This way, you won't need to lay out every single hole on each piece. Simply clamp the template in place and start drilling.

There are few things to note here: First, the hole sizes are not all the same. Second, the shelf pin holes are not through holes. They're drilled ⅜" deep. And finally, you'll want to pay close attention so that you drill the shank holes for the legs and modesty panel in the proper parts, as shown in the drawing above.

LAMINATE. Once assembled, I completed the cases by applying plastic laminate to the outside faces of each case. The short article on the facing page will guide you through the steps in working with this material.

Shop Tip: Drilling Guide

To save set-up time for drilling all the holes in the case sides, I made a simple drilling guide from ¼" hardboard.

You'll want to label the holes so that they're drilled in the correct locations. Line up the guide with either the front or back edge.

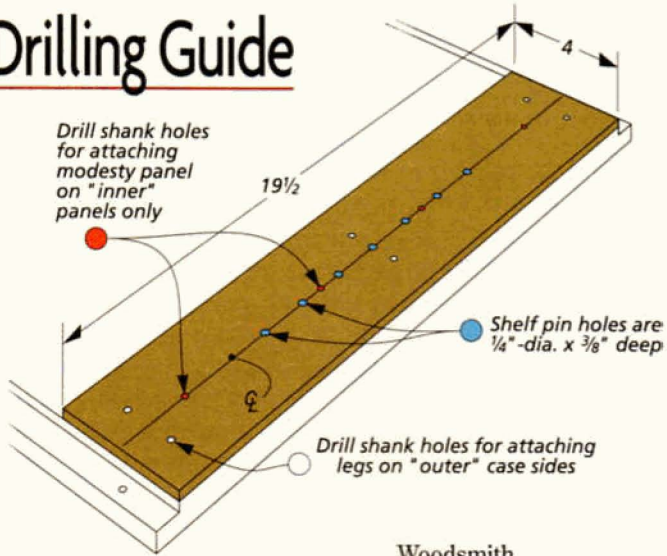

How-To:
Work with Plastic Laminate

Although typically found on kitchen countertops, you can apply plastic laminate to other kinds of projects. It's easy to clean, hard-wearing, and gives a distinctive look. Most home centers stock sheets of laminate in a limited range of colors and patterns. But many other choices are available. Laminate comes in sheet sizes from 4' square up to 5' x 12'. Turn to page 49 to find out what's available.

Although it's not a typical woodworking material, you can cut and shape laminate with all your usual power tools. You can see the steps I used in the drawings at right.

CUTTING. There are a couple of things I want to mention about working with laminate. First, when cutting it on the table saw, I like to attach an auxiliary fence to the rip fence. The reason is the thin laminate can slip under the bottom of the fence face and get stuck.

Second, it's a good idea to use a carbide blade with a zero-clearance insert plate. This way, you back up the cut and prevent chipping.

GLUING. Once the pieces are cut, the next step is to glue them in place. I've found contact cement works best for this application. But it gives off strong fumes, so be sure to have plenty of ventilation.

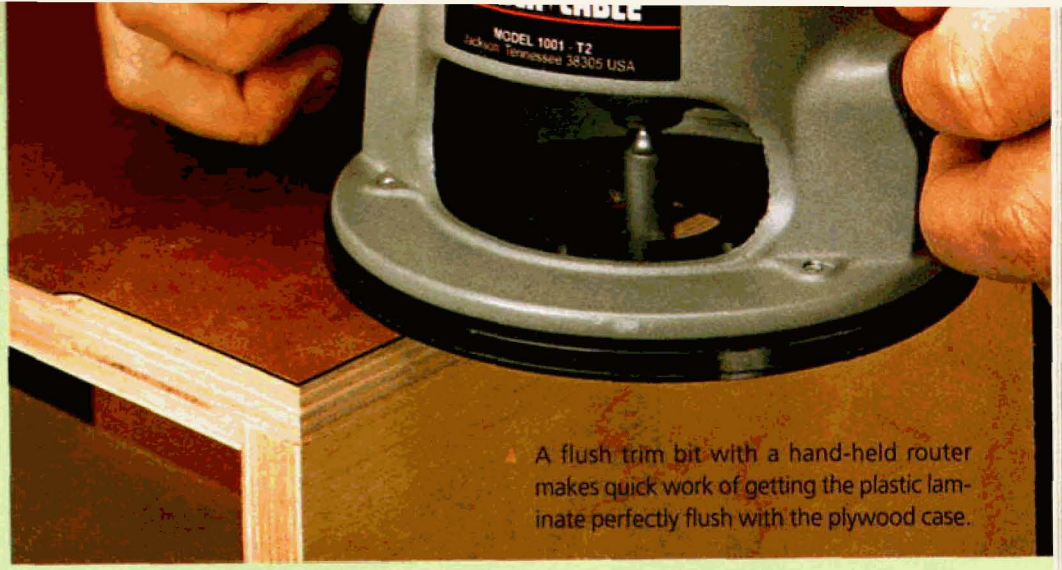

A flush trim bit with a hand-held router makes quick work of getting the plastic laminate perfectly flush with the plywood case.

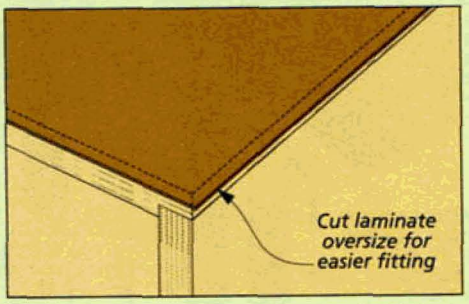

Cut the Laminate. *You can cut plastic laminate on the table saw with a carbide blade. Cut the piece slightly oversize to make positioning and gluing the pieces easier.*

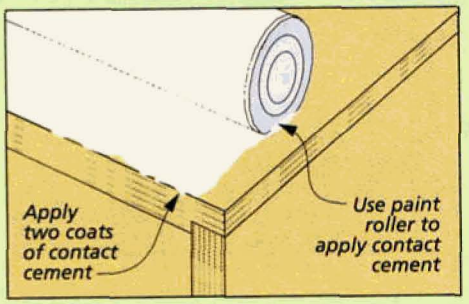

Spread the Contact Cement. *Roll out a thin coat of contact cement on both the panel and the laminate. Follow up with a second coat after the first has dried to the touch.*

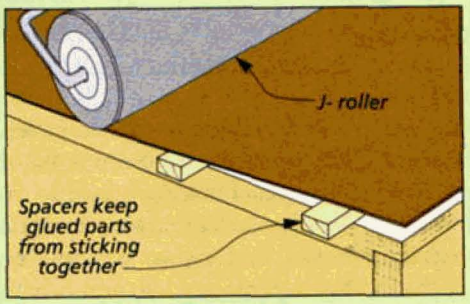

Position the Laminate. *Use spacers to keep the faces from touching while aligning the laminate. Then starting at one end, remove the spacers and roll the laminate flat.*

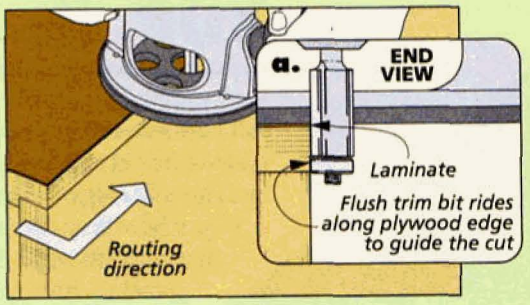

Trim it Flush. *Finally, trim the overhanging edges. I use a router with a flush trim bit. The bearing rides along the plywood edge for a perfect fit.*

Materials: Backing Laminate

Applying plastic laminate to one face of a large, unsupported panel (like the desk top) can cause it to warp. The reason for this is the unlaminated side absorbs and releases moisture while the laminated side doesn't.

To "balance" the panel, you need to apply laminate to both faces. If the opposite face isn't seen, using the same, colored laminate can be a waste of materials. A less-expensive alternative is to use "backing laminate." This thin laminate (top) doesn't have a color layer, but it still "seals" the panel just as well.

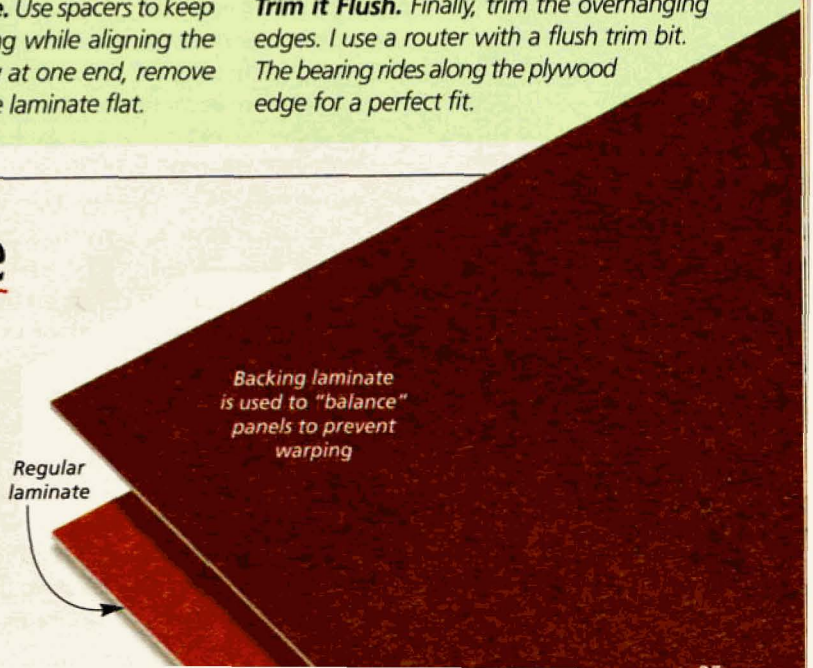

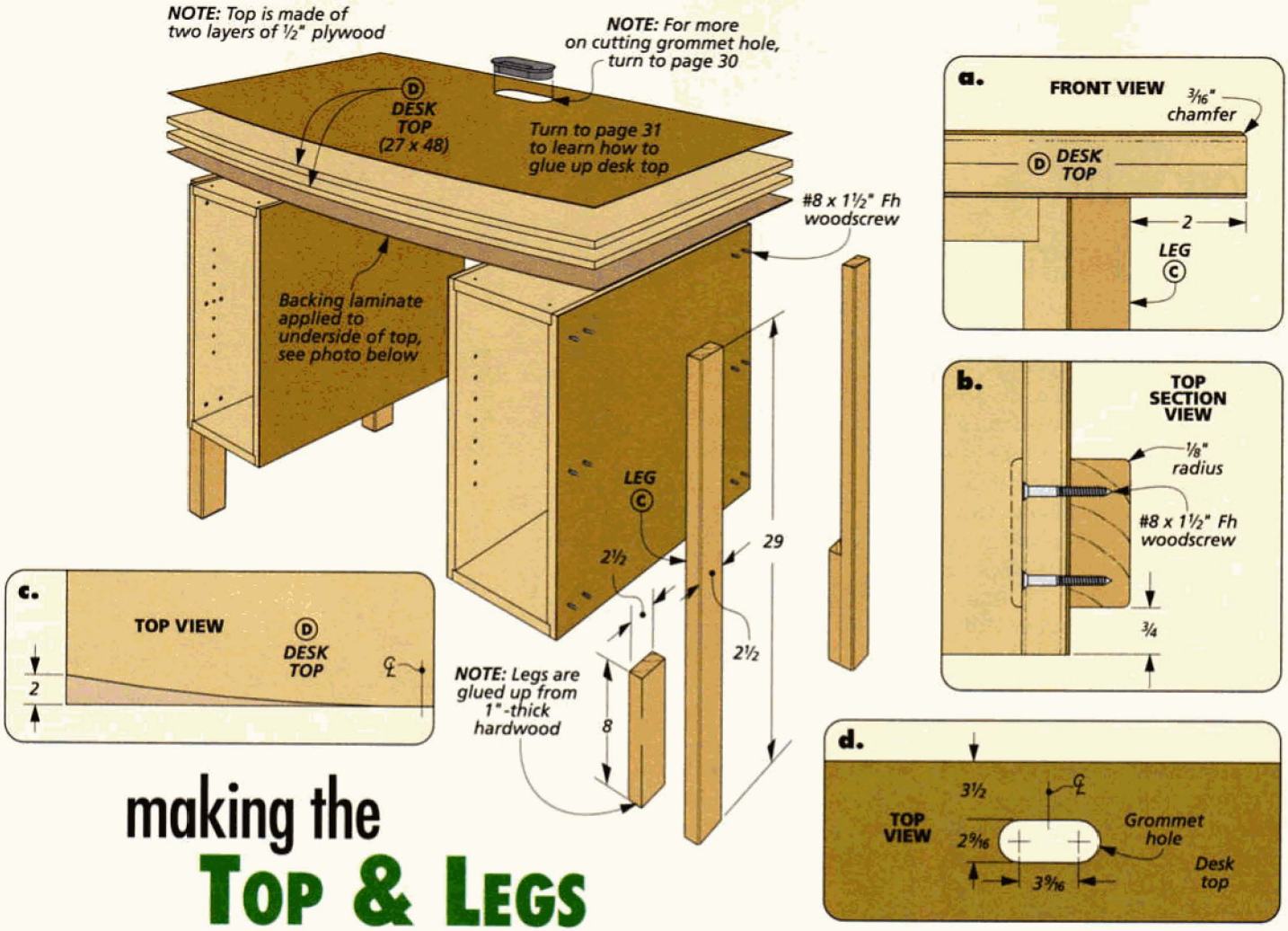

making the TOP & LEGS

With the side cases complete, I next added a pair of legs to the outside of each case. The legs are made to look as if they have been notched to hold the cases. But really, the legs are glued up from two 1"-thick pieces of hardwood. The first piece runs from the top to the floor. The second piece is cut to fit under the case.

ROUNDOVER. After gluing up the legs, I routed a roundover on the outside edges and bottom of each leg. This prevents the leg from splintering if the desk is slid across the floor.

▲ To create a smooth and rigid desk top, start by gluing up two layers of plywood. Then, apply plastic laminate to both faces of the panel.

Now, all it takes to complete the leg assemblies is to screw them to the cases. I made a spacer to position the legs accurately on the leg boxes. A clamp or two will hold them in place while you drive the screws home (detail 'b').

LAYERED TOP. The only other large section of the desk left to build is the desk top. In the drawing above, you can see how it's made.

To stand up to everyday use, I built up the desk top like a sandwich. It consists of two layers of ½" plywood between a layer of laminate on the top and bottom, as you can see in the photo at left.

Making a top like this poses some challenges. The first of these is gluing the two layers of plywood together so that they stay flat and have a good bond. To learn a simple way to do this, turn to page 31.

CURVED FRONT. After taking off the clamps, the next challenge you'll come across in making the top is cutting a gentle curve on the front edge. Actually, rough cutting isn't a big deal. (I used a jig saw.) The challenge is smoothing the curve.

The solution to getting an even curve is simple. It's just a matter of filing and sanding the edge until it's smooth and even. It's difficult to see imperfections, so I like to check my progress by feeling the edge to pick out any dips or flat spots.

APPLY LAMINATE. Once the curve is smoothed, you can then apply plastic laminate. The process is practically the same as was done with the cases. But there's one important difference — to "balance" the desk top and keep it from warping, I applied laminate to *both* the top and bottom faces, drawing above.

There's one more thing I want to mention. I used "backing" laminate on the bottom face. (For more, see the box on page 25.)

CHAMFER. There are two details left to take care of on the desk top.

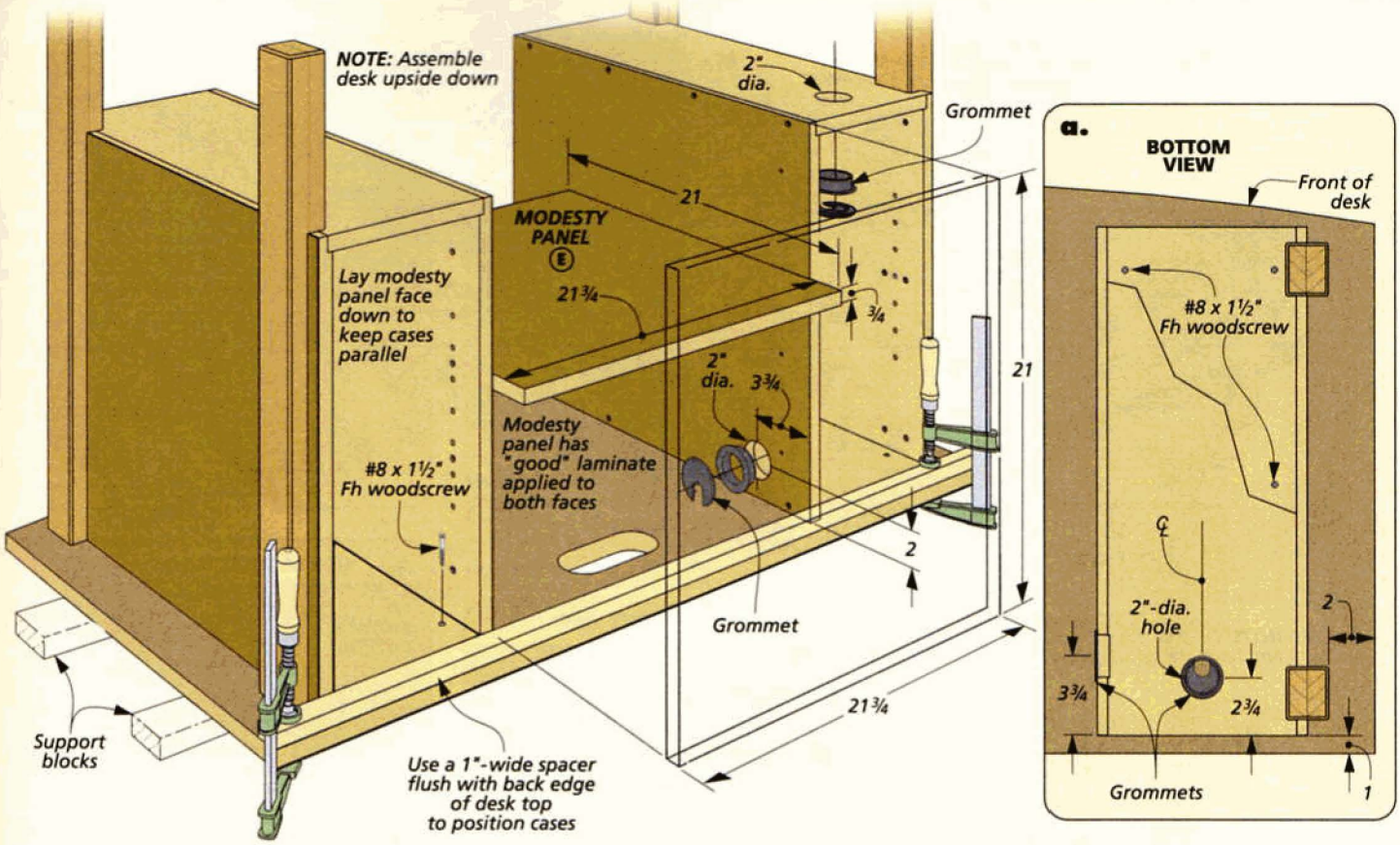

The first is to rout a chamfer on the top edges, as shown in detail 'a' on the opposite page. Besides softening the top, this can help keep the laminate from chipping.

The final detail is to cut an opening near the back to provide access for cords (detail 'd' on the facing page). The opening is covered by a plastic grommet. You can see how I did this on page 30.

MODESTY PANEL. Now that the top is complete, you're just about ready to assemble the parts. There's only one part missing. And that's a modesty panel. Besides giving the desk a finished look, it strengthens the desk and keeps it from racking.

Making this piece is about as simple as it gets. It's cut to size from ¾" plywood and then has laminate applied to both sides. Note: I used "good" laminate on both faces here since they'll be visible.

ASSEMBLY. With the modesty panel ready to go, the desk can be assembled. What makes assembling this project so simple is that there are only four sections to deal with. The drawing above shows the steps I took to keep everything aligned.

To make things as easy as possible, I assembled the desk upside down on some support blocks. Next, I clamped a spacer to the back edge of the desk top to position the cases accurately.

Then to keep the cases parallel to each other, I laid the modesty panel down between them. At this point, the cases can be screwed to the top. And the final step is to screw the modesty panel in place.

GROMMETS. After assembling the desk, I added a pair of round, plastic grommets to one of the cases. They provide easy access for cords (drawing and detail 'a'). One hole is drilled in the inner case side. And the other is drilled in the case bottom.

BACK PANELS. To complete the main part of the desk, you can make a pair of case backs (drawing below). They're pretty similar to the modesty panel. A small (1/16"-wide) rabbet that's routed on all four edges creates a shadow line. The case backs are held in place by magnetic catches so you can easily "pop" them off the back to get at the cables.

Note: Some computers can generate a lot of heat. You may want to leave the back off to provide adequate ventilation.

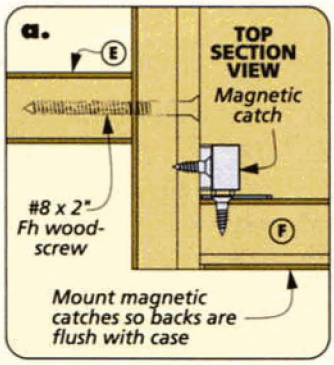

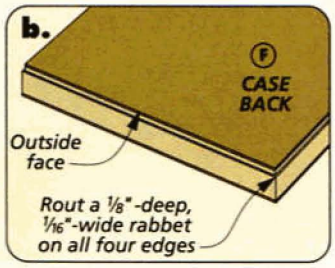

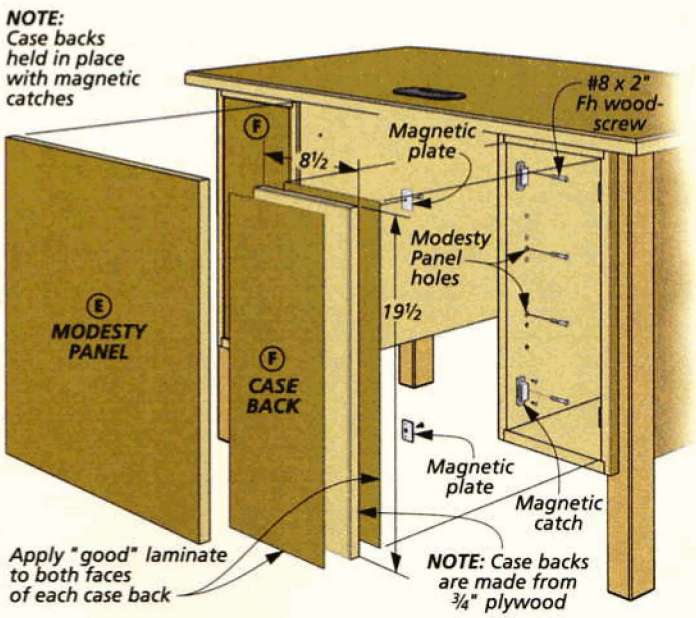

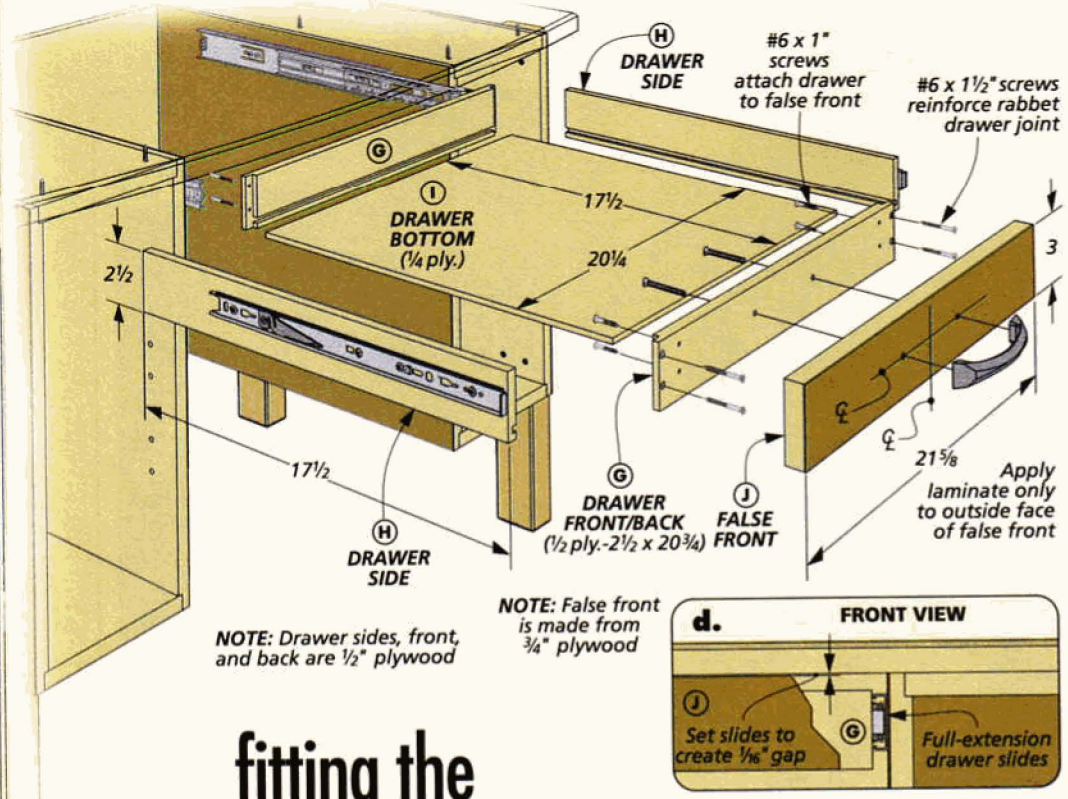

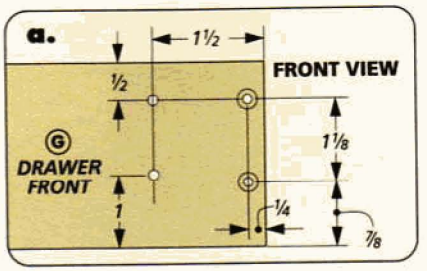

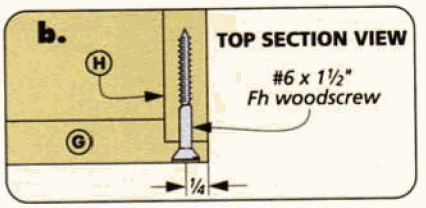

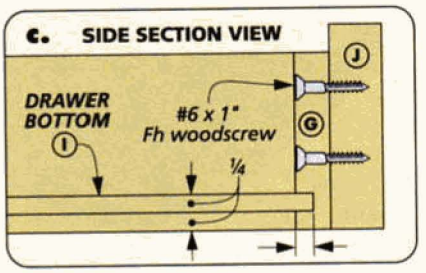

fitting the DRAWER & SHELVES

At this stage of the project, the desk is nearly complete. And, best of all, there aren't any other large, heavy parts to make. All that's left is to add a couple of shelves and a drawer. Let's start with the drawer.

PENCIL DRAWER. In keeping with the rest of the desk, the drawer is built with straightforward, rabbet joinery. The drawing above gives you a pretty good overview of how the drawer goes together. After cutting the drawer sides, front, and back to size, you can start on the joinery.

When you've completed the joinery, the next step is to cut a groove in the drawer parts to hold a bottom. Once it's sized, you can glue up the box. Here again, I added a few screws to reinforce the joints.

FALSE FRONT. The last thing to do is to make a false front for the drawer. It's just a piece of ¾" plywood with laminate glued on one face. (Since this part is relatively small and it will be secured to the drawer box, you only need to laminate one side.) Installing the pull and attaching the false front completes the drawer.

The drawer is attached to the desk with a pair of full-extension slides. Each slide consists of two parts. One part is attached to the drawer box, and the other is screwed to the leg cases. To keep the drawer level and operating smoothly, I made a spacer to position each part consistently.

Materials, Supplies, & Cutting Diagram

A	Case Top/Bottom (4)	¾ ply. - 9 x 24
B	Case Sides (4)	¾ ply. - 24 x 21
C	Legs (4)	2 x 2½ - 29
D	Desk Top (1)	1 ply. - 48 x 27
E	Modesty Panel (1)	¾ ply. - 21¾ x 21
F	Case Backs (2)	¾ ply. - 19½ x 8½
G	Drawer Frt./Back(2)	½ ply. - 2½ x 20¾
H	Drawer Sides (2)	½ ply. - 2½ x 17½
I	Drawer Bottom (1)	¼ ply. - 17½ x 20¼
J	False Front (1)	¾ ply. - 21⅝ x 3
K	Shelves (2)	¾ ply. - 8 7/16 x 23¼

- (1) Drawer Pull w/Screws
- (1) Oval Grommet
- (2) Round Grommets
- (1 pr.) Full-Ext. Drawer Slides w/Screws
- (8) Magnetic Catches w/Screws
- (4) #6 x 1" Fh Woodscrews
- (8) #6 x 1½" Fh Woodscrews
- (36) #8 x 1½" Fh Woodscrews
- (40) #8 x 2" Fh Woodscrews
- ¼"-dia. Steel Rod (for shelf pins)

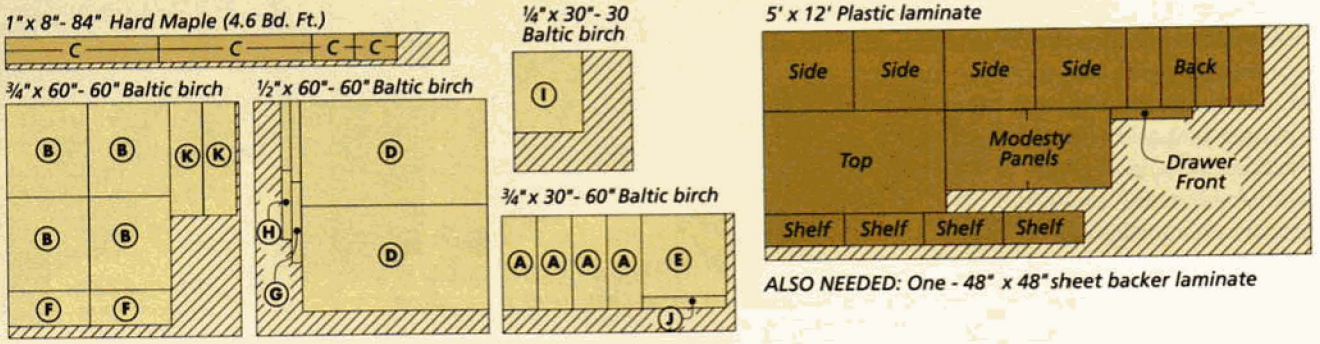

ALSO NEEDED: One - 48" x 48" sheet backer laminate

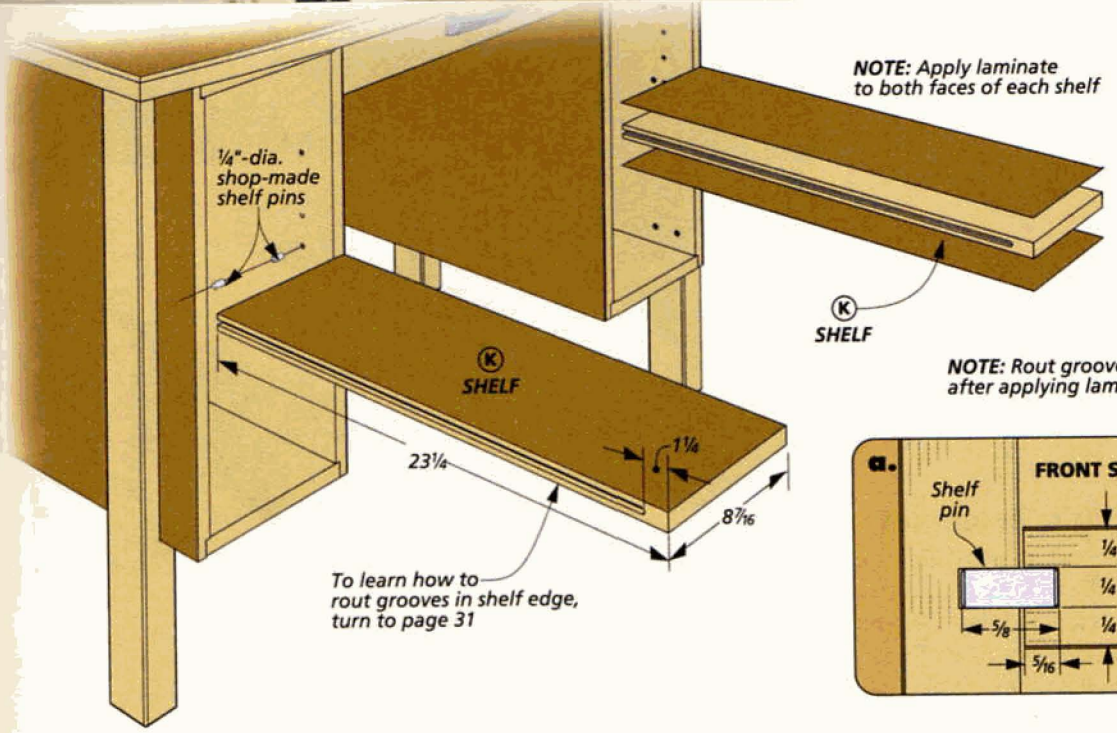

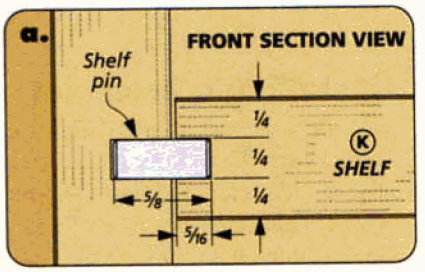

ADJUSTABLE SHELVES. The final parts of the desk to make are the adjustable shelves. And by now, you can guess that these will be simple.

After cutting the shelves to size, I applied laminate to both faces — just like the case backs. Besides keeping the shelf panels balanced to prevent warping, it doesn't matter which face is up.

The shelves are supported by shelf pins that I cut from some steel rod. The pins fit in a slot that's routed in each edge of the shelf. I routed the grooves on the router table, and you can see how I did this on page 31.

FINISHING THE DESK. Before putting the desk to use, I applied a few coats of wiping varnish to seal and protect the legs as well as the exposed edges and surfaces of the plywood.

And in the box below, you'll find a few "extras" that give the desk a more "finished" look. W

DESIGNER'S NOTEBOOK

Adding doors and a monitor stand

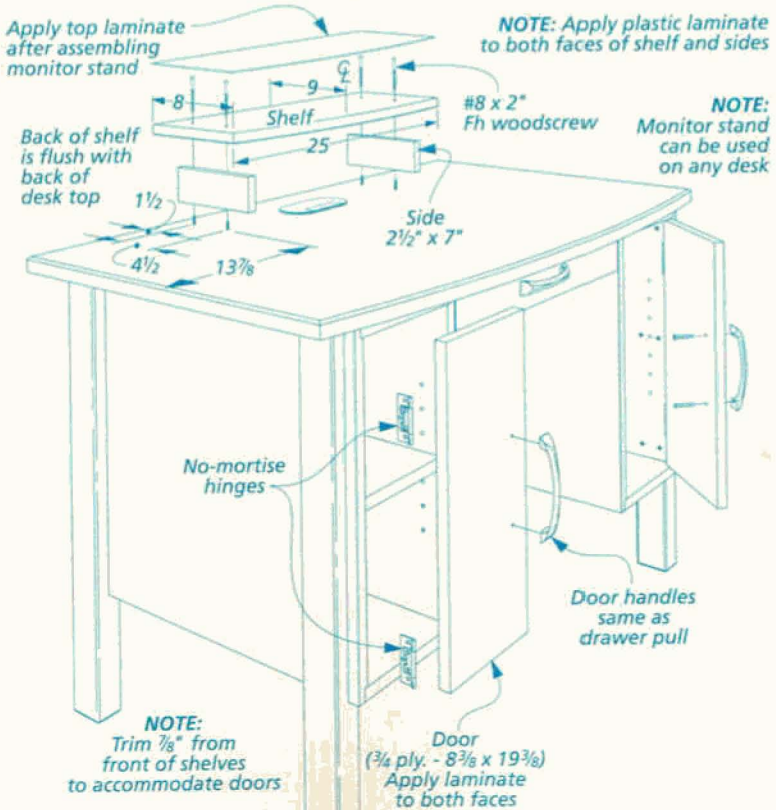

SHOP NOTEBOOK

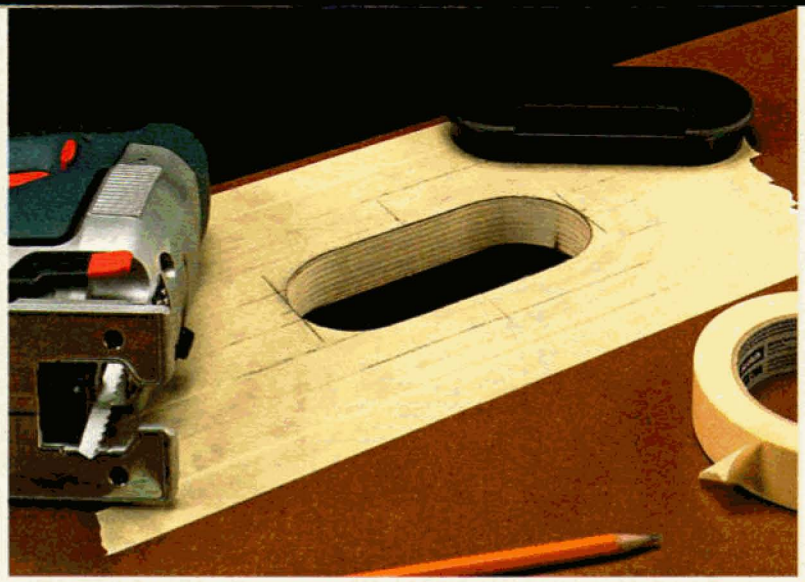

Installing a Grommet

The desk project on page 22 has a hole covered by a plastic grommet in the top to accommodate wires and cords. I also added a pair of holes and grommets to the case that will hold the computer tower.

The drawings below show the process I used to locate and size the oblong hole for the grommet in the desk top. Basically, after the top is completed, you're going to lay out the hole, drill a couple of small "starter" holes and then use a jig saw to remove the waste.

PROTECTIVE TAPE. One of my goals was to not scratch, chip, or mark up the laminate while cutting the hole. So the first thing I did was cover the work area with masking tape. This will provide protection and make the layout easier to see.

LAY OUT THE HOLE. My grommet called for an oblong hole, 2 9/16" wide by 6 1/8" long. And the grommet itself makes a handy layout tool. I first measured and marked the ends and sides of the hole. Then you simply place the grommet between the marks and trace around it.

STARTER HOLES. Next, you'll need to drill starter holes for the jig saw blade. A pair of 1/2"-dia. holes centered on the ends of the layout will do the job. But before drilling these holes, I clamped a backer board to the underside of the top. This will keep the drill bit from "blowing out" the underside of the top.

SAWING THE HOLE. With the grommet in place, the sides of the hole won't show, so a super-smooth cut isn't a must. But you do want a cut that's pretty accurate and chip free. The first key for me was to use a stiff, fine-cutting blade designed for plywood and plastic laminates.

When making the cuts, take it slow and steer right along the inside edge of the layout line. When both halves of the cut are completed, you can test the fit of the grommet. If it's a little snug in places, you can use a file or rasp to do some fine tuning.

ROUND HOLES. I made the round (2"-dia.) access holes in the case using the same technique. The only difference here is that you'll only need one starter hole.

How-To: Cut a Clean Hole

Lay Out the Hole. After applying masking tape to the work area, mark the limits of the hole and then use the base of the grommet to draw the layout lines.

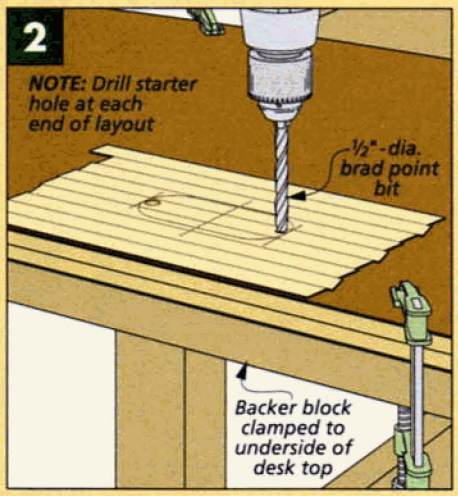

Starter Holes. You'll need a place to start the jig saw cuts. So with a backer block clamped in place, drill a hole through the top at each end of the layout.

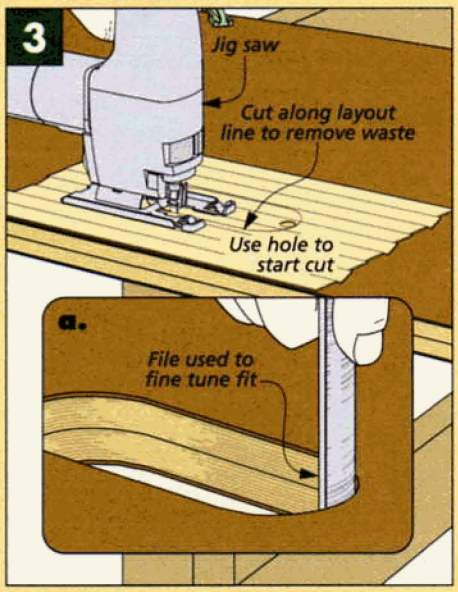

Cut Away the Waste. Starting at one end, cut along the layout line to the opposite hole. Make a return trip to complete the job. A file will handle any cleanup.

A Two-Piece Top

The 1"-thick panel for the desk top on page 22 is made by gluing together two pieces of ½" Baltic birch plywood. The key here is that when you make this panel, you want to be certain that it ends up flat and also tightly glued through both the center and around the edges.

CAULS AND CLAMPS. If you have lots of clamps, it's easy to apply enough pressure around the edges. The question is, how do you squeeze the panel through the middle and also keep the two plywood pieces flat? Take a look at the drawing at right and you'll see an answer.

I used five sets of stout cauls to apply pressure across the width of the panel and keep it flat during the glueup. A pair of cauls is placed at each end of the top and the other three are spaced evenly along the length, about 12" apart.

A SLIGHT BOW. The cauls I used were simply lengths of 2x4 with one good, straight edge. But to ensure plenty of clamping pressure through the center of the panel, you want the bearing surface of your cauls to have a slight crown. An easy way to create a consistent crown is to add a few staggered layers of masking tape to the straight edges, as shown above.

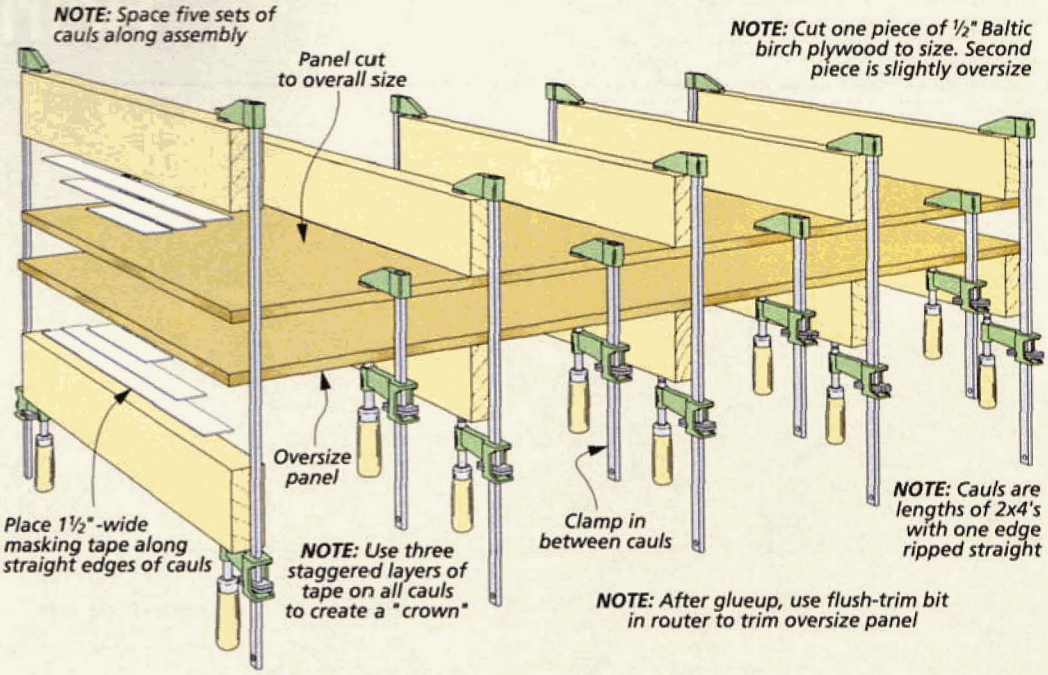

THE GLUEUP. I started by cutting one piece of plywood to overall size and the second piece slightly oversize to trim flush later. And then if your plywood isn't flat (mine wasn't), plan on gluing the two "bowed," or convex, sides together.

When everything was ready to go and within arms reach, I positioned the bottom cauls along my worksurface and laid one piece of plywood over them. Now, you want to apply plenty of glue and spread it evenly over the surface.

Next, lay the second piece of plywood on the first and align the edges. Then position the top cauls and tighten a clamp at the end of each set. Finally, you'll want to add a clamp between each set of cauls to ensure a tight seam all the way around the perimeter.

Stopped Grooves

To complete the shelves for the desk project, I routed a stopped groove in each side edge. The important thing here is that the grooves are aligned from one side to the other so that the shelf sits straight. The two drawings at right show the setup and technique I used to do this on the router table.

SAME FACE. The key to aligning the grooves is to rout each one with the same face of the shelf referenced against the fence. The first groove is started at the back of the shelf (Fig. 1). I made a mark on the table to show me where to stop the cut.

To rout the opposite groove, I flipped the shelf end for end to keep the same face against the fence. You'll make this cut by aligning the front of the shelf with a "start" mark and then lowering it into the bit, as shown in Fig. 2.

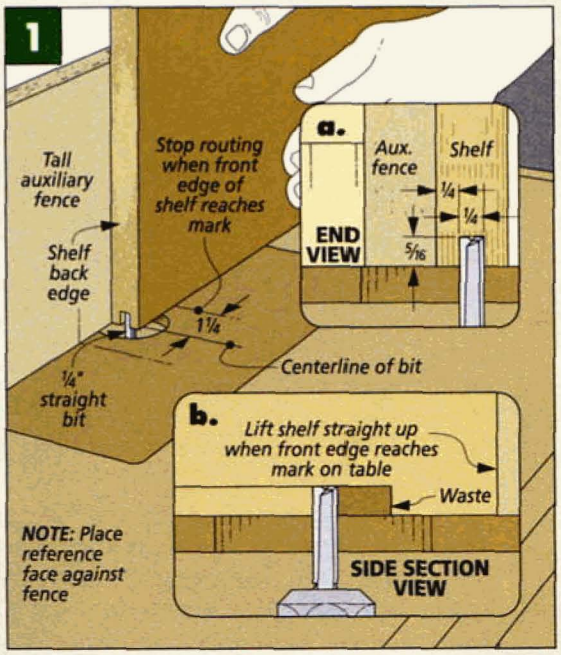

First Groove. After adjusting the bit height and the fence, make a pair of start and stop marks on the table. The first groove is started from the shelf back and stopped when the front is on the mark.

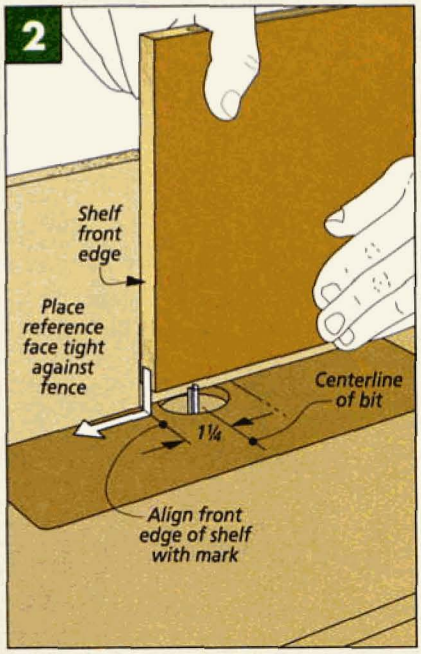

A Plunge Cut. A mark on the router table shows where to align the front of the shelf. Then lower the shelf onto the bit and rout to the back edge.

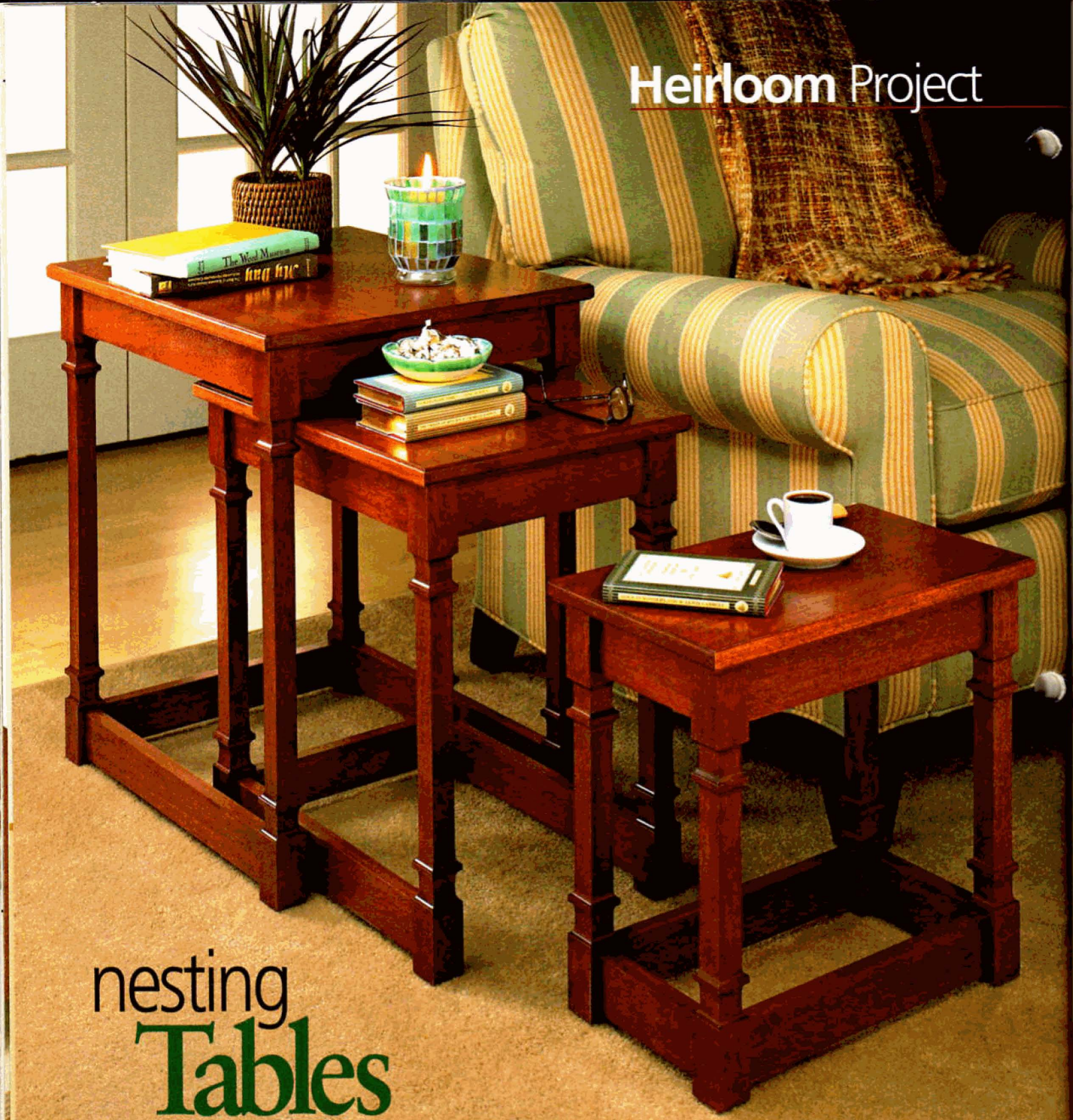

nesting Tables

This handsome set of tables combines a classic look with some great woodworking and a clever function.

I've always admired the practicality of nesting tables. As you can see, you have three tables, each a different size, that all fit into the same space. Need a table for your morning coffee, just slide one out.

From a woodworking standpoint, building nesting tables is a pretty sweet deal too. It's almost like one of those "buy one, get two free promotions" you see advertised. The details and joinery of all three tables are identical. So even with three tables, you'll find it's not three times the work.

And if you're looking at the classically shaped legs and thinking how tricky and time-consuming they'll be, think again. Just turn the page and check out the router table technique.

CONSTRUCTION DETAILS

OVERALL DIMENSIONS: 22"W x 18"D x 24¾"H

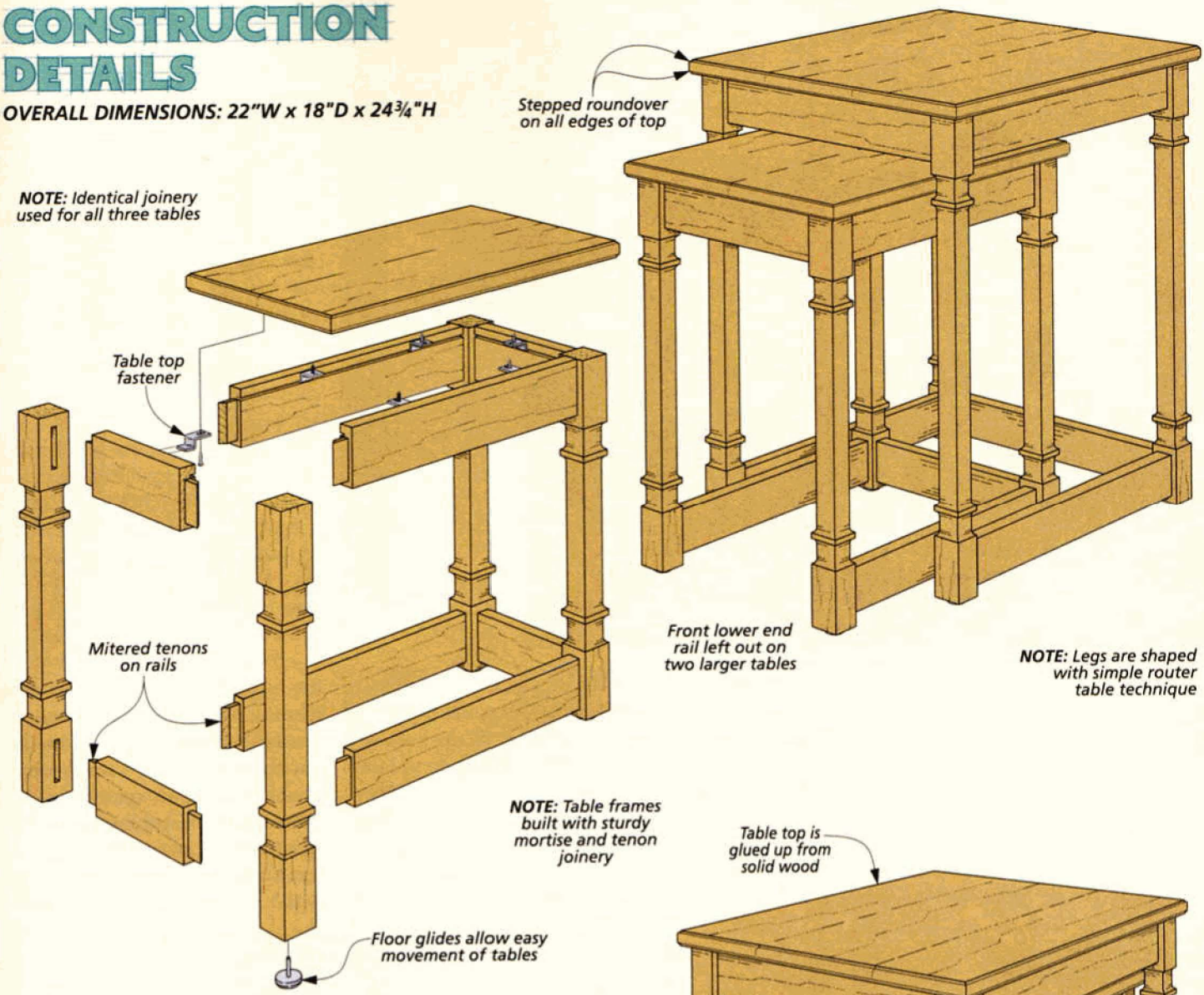

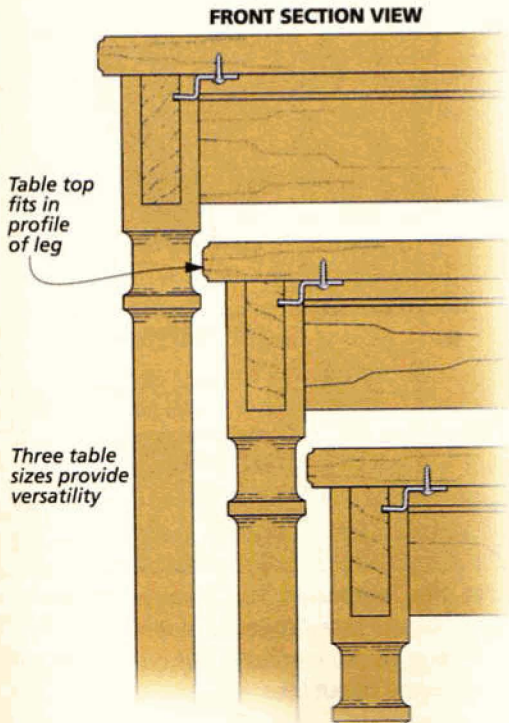

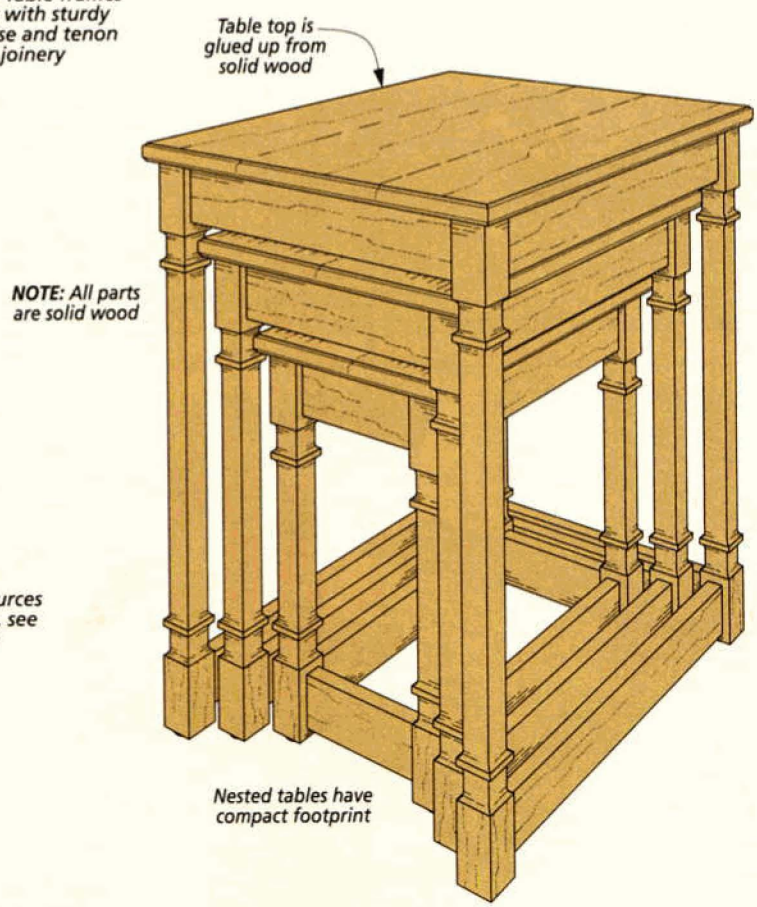

NOTE: *For sources of hardware, see page 49*

shaping the LEGS

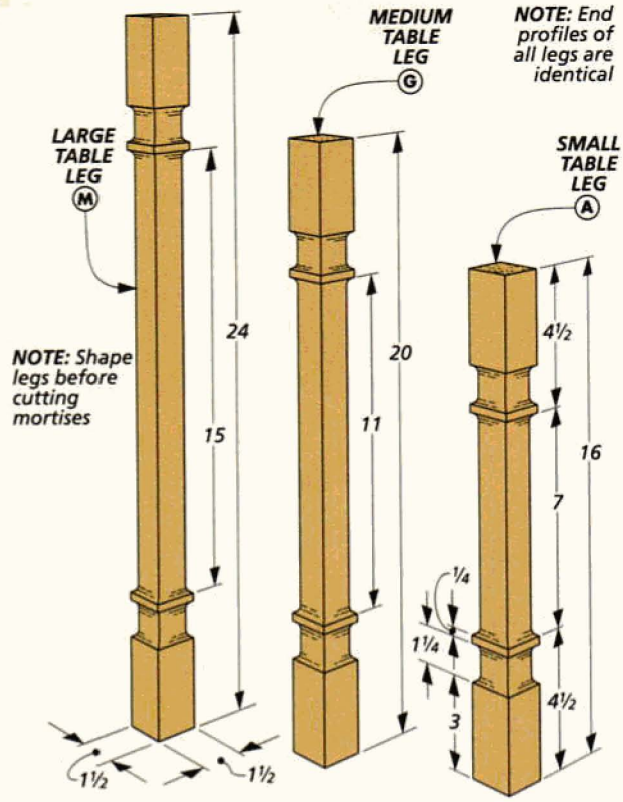

For me, the most interesting woodworking on this project is making the classically shaped legs. And since shaping the legs is also the most involved part of building the tables, that's where I started. Once this is done, the rest of the job goes quickly.

THE PROCESS. The secret to shaping the legs is a template routing jig and some time at the router table. In a nutshell, the box-like jig tightly sandwiches the leg blanks between two plywood routing templates that form its top and bottom. Then a long flush-trim bit is used to rout away the waste (photo above).

THE JIG. After cutting the leg blanks to size, you'll need to build the jig before you can start the shaping. The drawings below do a good job of showing the details, but there are several things that need a little more explanation.

The really neat thing about the jig is that you can use it to shape the legs for all three tables. Take a look at the drawing of the three legs,

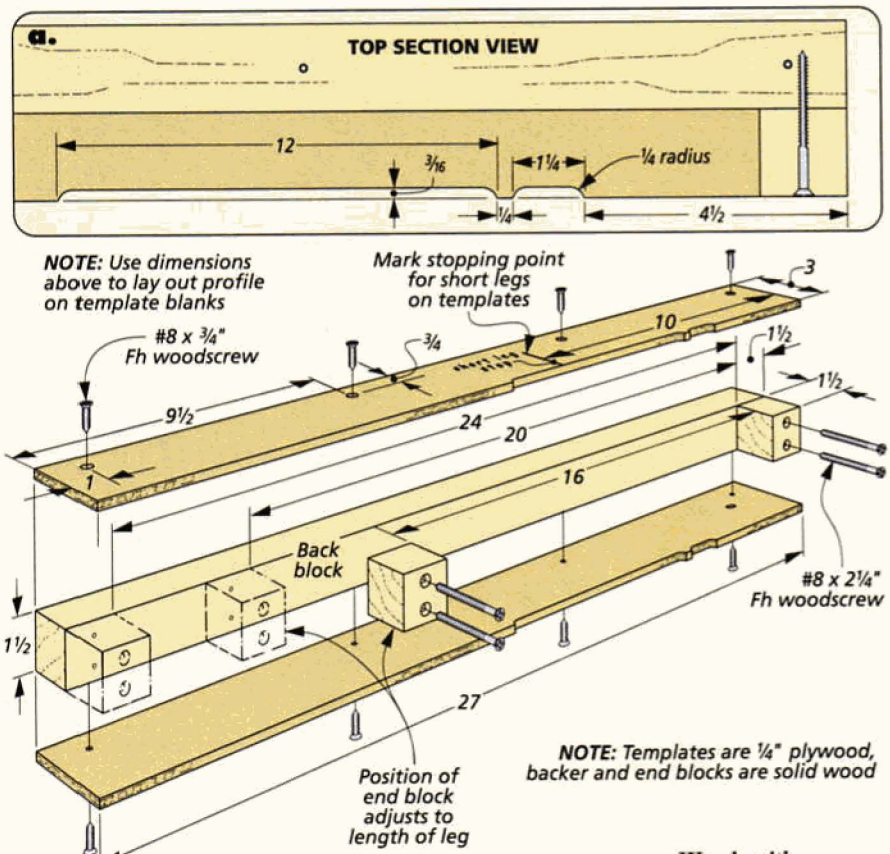

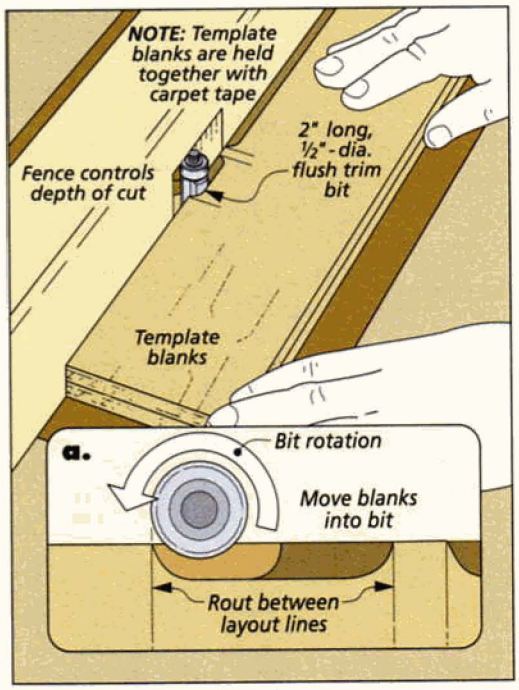

Rout the Templates. *With the two template blanks carpet-taped together and the fence in place as a guide, carefully rout out the waste between the layout lines.*

and you'll see that the top and bottom profile sections of all the legs are identical. The straight section through the center accounts for the difference in length.

Essentially, the jig and templates are made to rout one end of the profile on each leg face. After this section is completed, you then flip the blank end for end in the jig to rout the opposite end. The two cuts will meet in the middle to form the complete profile. You adjust the jig to fit the different leg sizes by simply repositioning the block on the "non-business" end of the jig.

THE TEMPLATES. As shown in the drawing on the opposite page, I made the two templates on the router table with the same bit I used later to rout the legs. Why two templates? Well, this allows you to use both sides of the jig, as you'll see later. Since the templates will guide all your cuts on the leg blanks, you'll want to make them accurately *and* install them correctly. Try to get them perfectly aligned both end to end and top to bottom when you attach them to the back block.

USING THE JIG. With the jig completed, you're ready to start routing. This is just a matter of following the right sequence.

The drawings at right show the step-by-step process I used to end up with smooth, chip-free legs. Routing each section (two on each face) is a three-step process.

The trick is that you're going to use the template on both sides of the jig to do the job. This eliminates the problem of chipout at the end of the the short coved section. When you move the jig in the normal right-to-left routing direction, the spinning bit tends to tear out chips of wood ahead of the cut. This could easily ruin the short shoulder between the end and middle sections. But by always cutting *into* the blank to create the coved ends, you avoid this problem.

And even though you have quite a few leg faces to rout, take your time here. The cleaner the faces, the less time you'll spend sanding when the routing is completed.

How-To: Rout the Leg Profiles

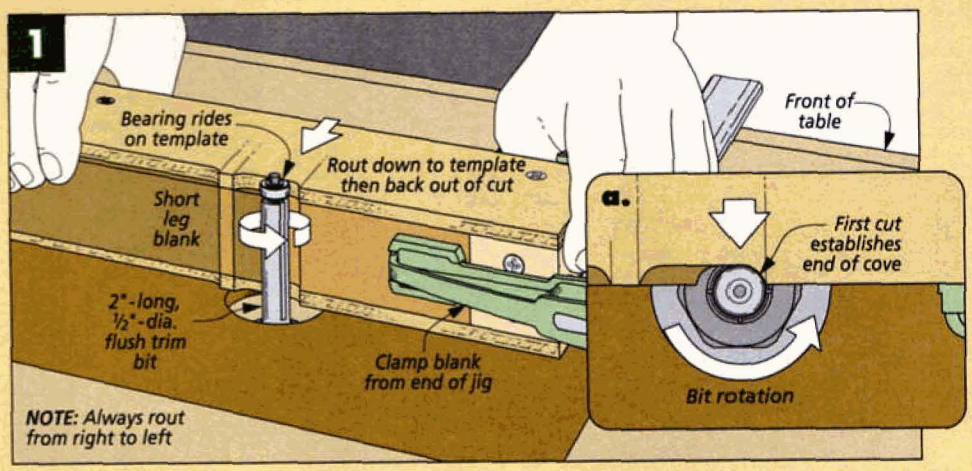

First Cut. *With a leg blank clamped in the jig and the flush trim bit adjusted properly, you're ready to make a "starter" cut on the short upper section of the profile. Move the jig into the bit at the end "cove" and nibble away until the bearing rubs the template and the cove cut is smooth and complete. Now, just back the bit out of the cut.*

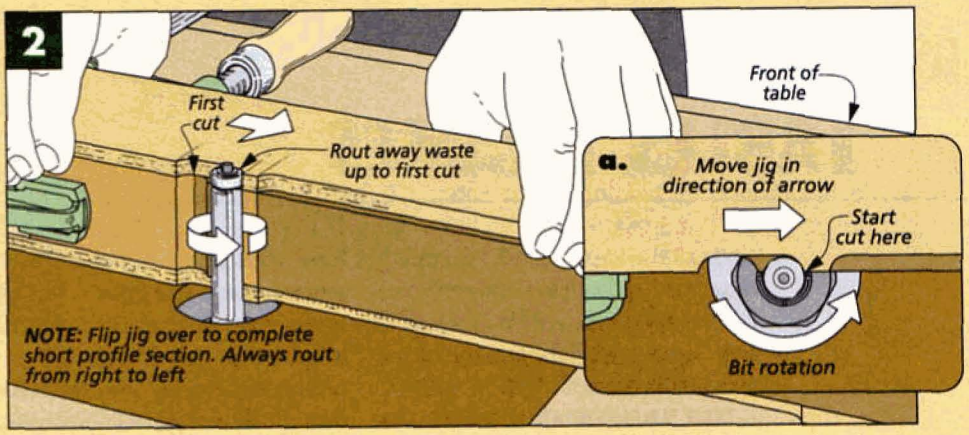

Second Cut. *To complete the short section, you'll need to flip the jig over and make the second cut using the template on the opposite side of the jig to guide the cut, as shown above. This cut is started just like the first cut. But now you can move the jig from right to left to nibble away the center waste between the profile ends.*

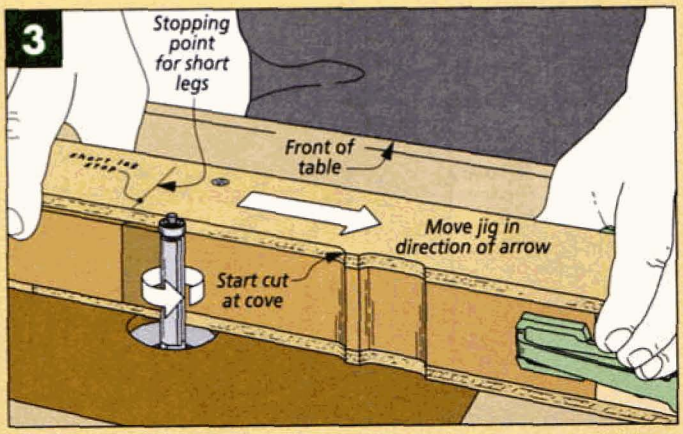

The Long Cut. *Now, you'll flip the jig back on its original side to rout the long center section of the profile. Slide the jig into the bit at the cove and take shallow right-to-left cuts to remove the waste. You only need to rout just past the halfway point on each leg.*

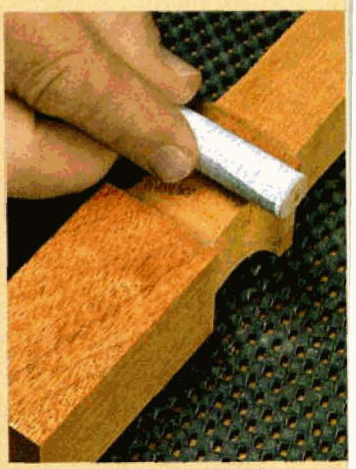

▲ Sandpaper wrapped around a dowel makes a good profile sander.

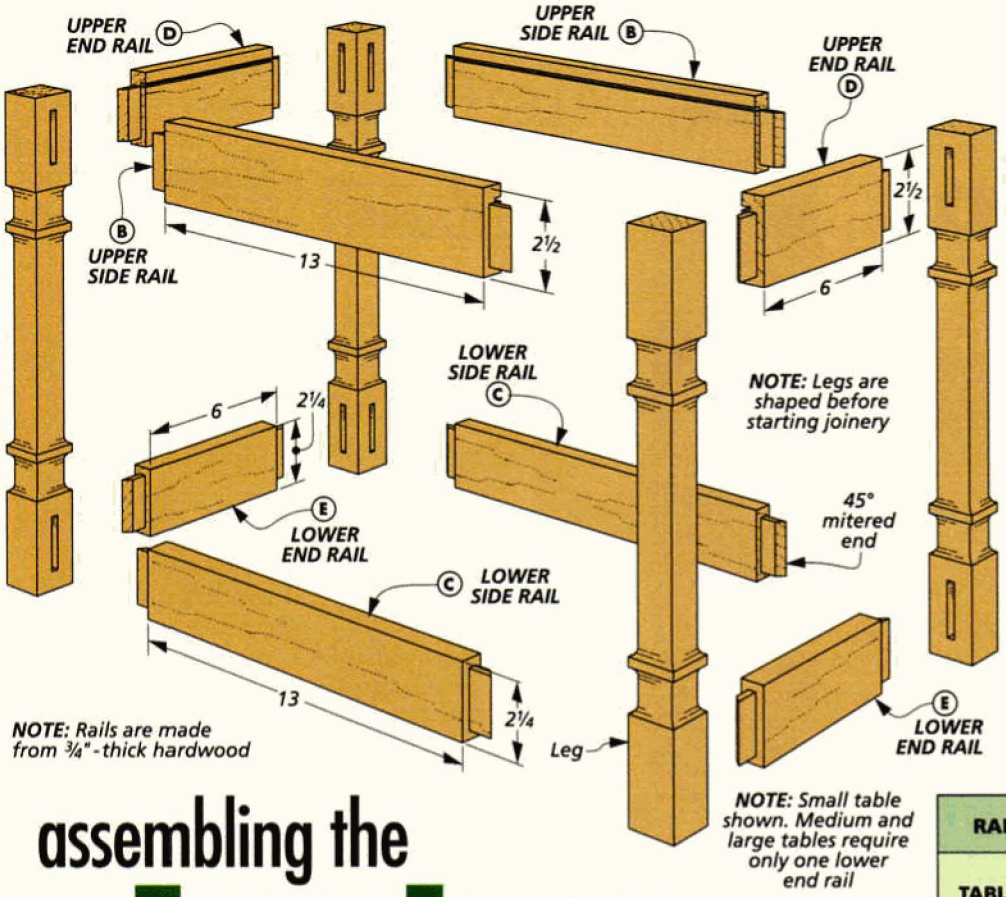

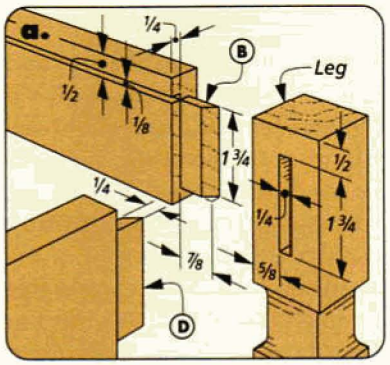

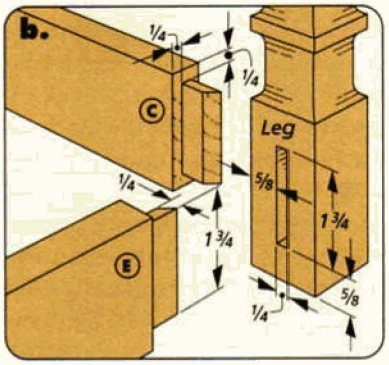

assembling the TABLES FRAMES

RAIL SHOULDER-TO-SHOULDER DIMENSIONS		
TABLE SIZE	SIDE RAILS	END RAILS
SMALL	13"	6"
MEDIUM	15½"	10"
LARGE	18"	14"

With all the legs shaped, you really have the hardest part of the project behind you. Now you're next task is easy — to connect the legs into three solid table frames.

THREE TABLES — IDENTICAL JOINERY. The drawing of the smallest table above shows you how the legs and a set of upper and lower rails are assembled with mortise and tenon joinery. The good news here is that the joinery on all three tables is virtually identical. Even though the length of the legs and the rails is different, the size and location of the mortises in the legs and the tenons on the rails are the same — with just one important exception. When you build the medium and large table, you're only going to install one lower end rail. This leaves one end of these two tables open so that all three can be nested together.

FIRST, THE MORTISES. The first thing I did was mark the legs clearly so I wouldn't get confused while laying out and cutting the joinery. Then the centered mortises can be laid out, as shown in details 'a' and 'b' above. You'll want to keep a couple things in mind here: The upper and lower mortises in the legs are identical in size, but the location is a little different in relation to the top and bottom of the leg. The upper mortises start ½" from the leg top, the lower mortises ⅝" from the leg bottom. And then remember that the two larger tables have only one lower end rail.

How-To: Mortises

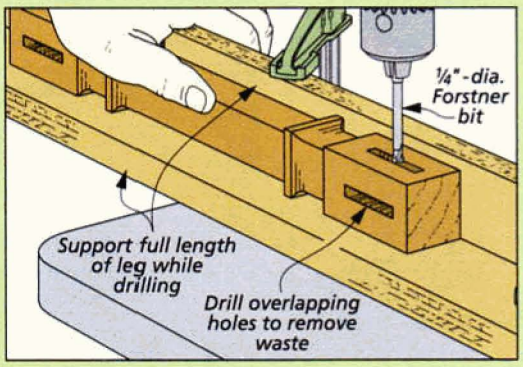

Drilling Out the Mortise. *A long, L-shaped support will make the job of drilling out the mortises on the drill press go much easier.*

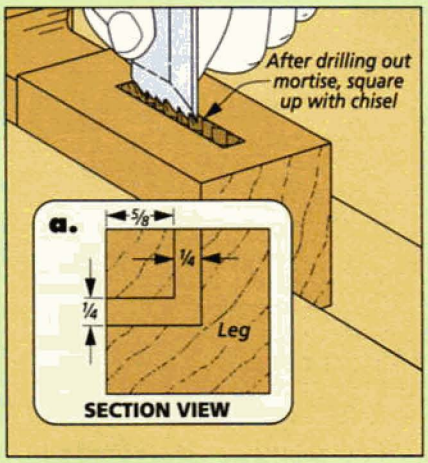

Cleaning Up the Mortises. *After cleanup with a chisel, the two mortises should meet in a sharp corner (detail 'a').*

Once the mortises are laid out, the How-To box on page 36 shows how to cut them. You can rough out the waste at the drill press, then clean up the mortise at the bench with a sharp chisel. The two mortises on the adjacent faces should meet as shown in the detail.

NOW, THE RAILS. With the mortises complete, you can set the legs aside for a while. Making the rails comes next. This job is pretty straightforward, but again, there are several things to point out.

The small table shown has two upper side rails, two lower side rails, two upper end rails, and two lower end rails (drawings, opposite page). The upper rails are 1/4" wider than the lower rails. So again, you'll want to mark the parts to keep them straight.

TENONS. After the rails are cut to size, you'll need to make tenons on the ends to fit the mortises in the legs. The box at right will run you through the process, step by step. One important thing to note is that the layout of the tenons on the upper and lower rails is different (details 'a' and 'b' opposite page). The drawings show the sequence for the tenons on the upper rails.

As you can see, the final step is to miter the ends of the tenons that fit adjacent mortises. You want to be sure to leave space for glue (1/16") between the mitered faces.

How-To: Cutting the Tenons

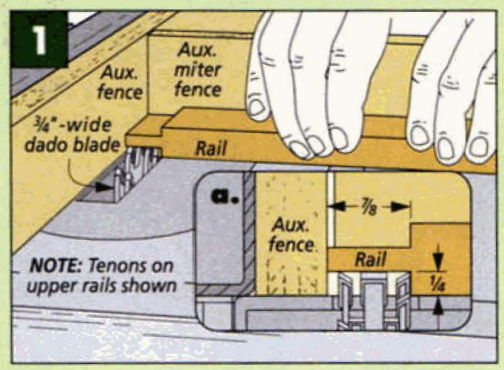

Cut the Cheeks. *You can start sizing the tenons by using a wide dado blade to cut the cheeks. Sneak up on the thickness of the tenon.*

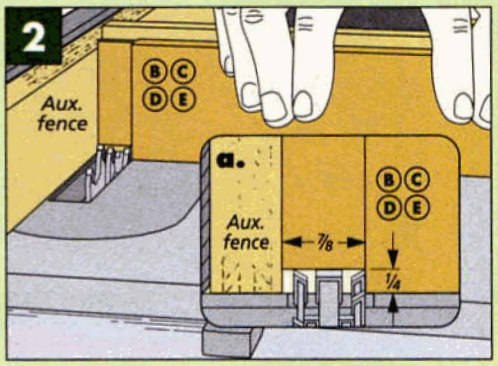

Remove the Bottom Waste. *Next, you want to cut away the waste at the bottom of the tenon. I like to nibble away at it with light passes.*

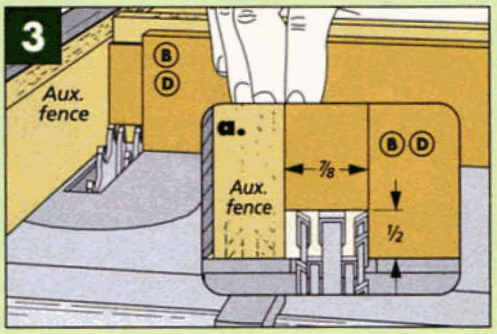

Now, the Upper Waste. *To complete the job, raise the blade to sneak up on the final width of the tenon. Use the mortise to check the fit.*

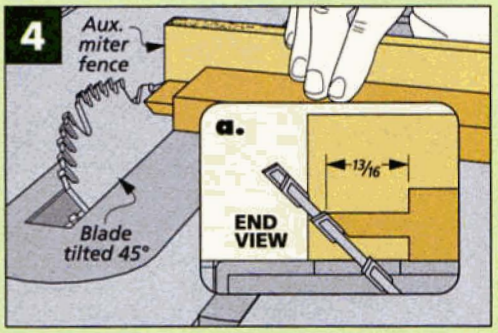

Mitered Ends. *The ends of most of the tenons will need to be mitered. This allows the two opposing tenons to both fit into the mortises.*

A GROOVE. With the joinery complete, there's one last task before the frames can be assembled. The upper rails need a groove (just a saw kerf) to accept table top fasteners (detail 'a' opposite page).

THE ASSEMBLY. The drawings below show how I went about the assembly. Since all three tables will eventually nest "as one," I paid extra attention to making sure the frames ended up square and true.

Shop Tip: Frame Assembly

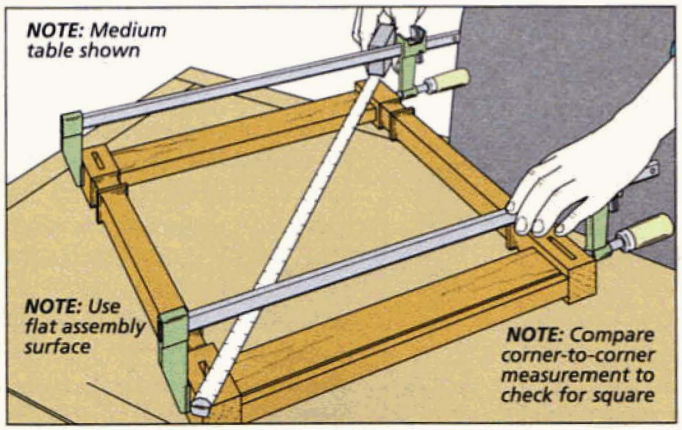

Long Sides First. *I started assembling the frames by gluing up the two sides. Once the clamps are tightened, check for square.*

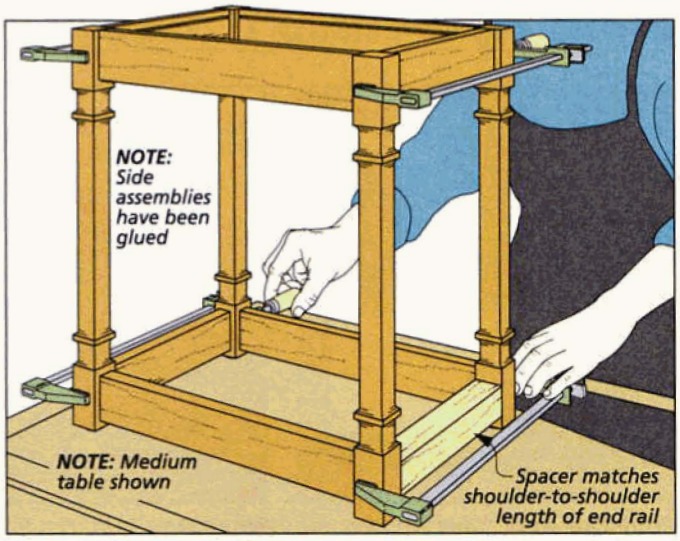

Add the End Rails. *Complete the job by gluing the end rails between the sides. A spacer block helps square the larger tables.*

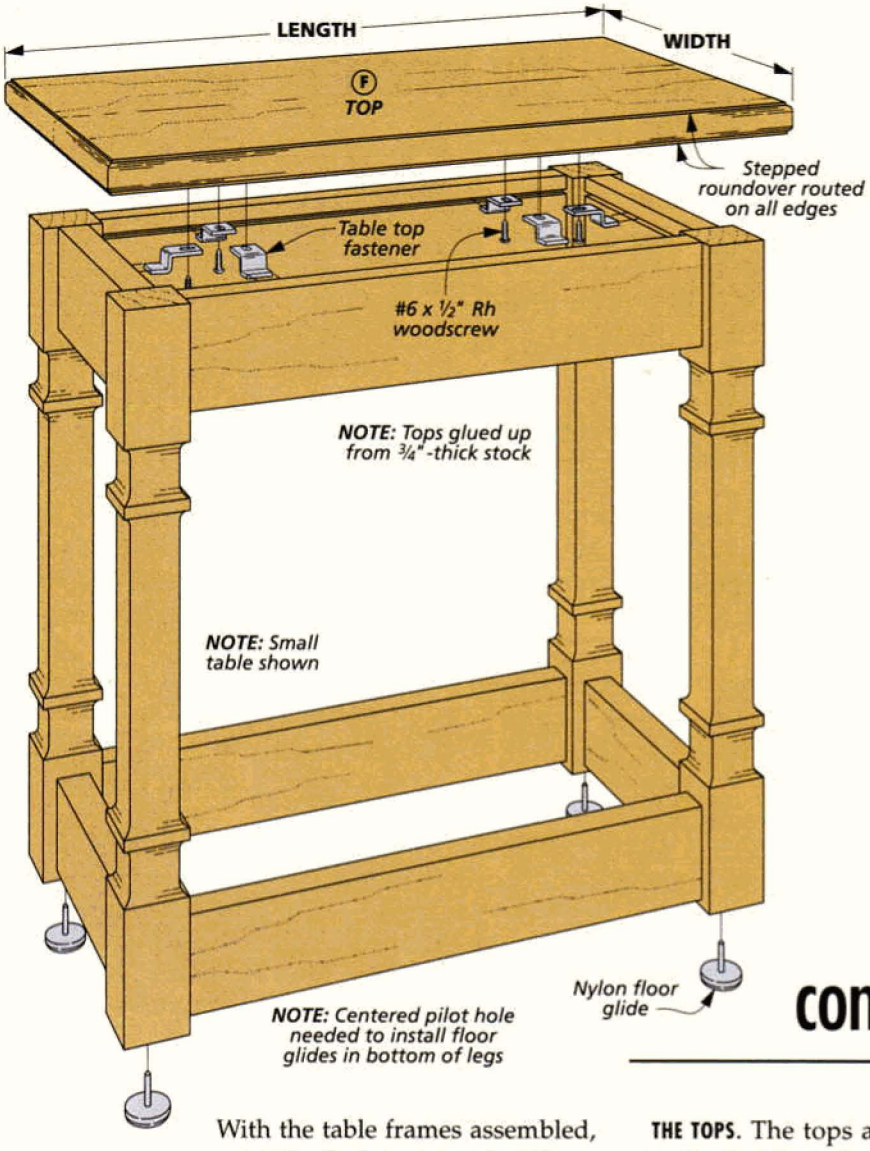

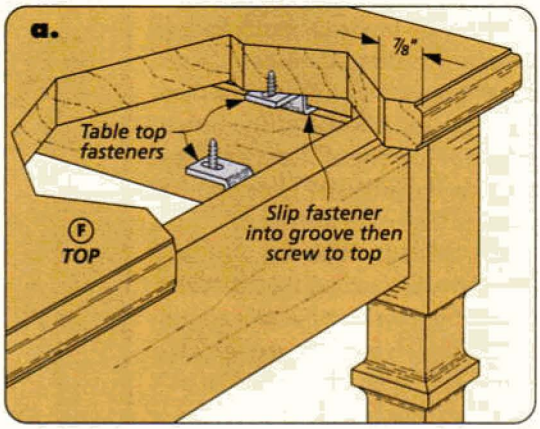

TABLE TOP DIMENSIONS		
TABLE SIZE	LENGTH	WIDTH
SMALL (F)	17"	10"
MEDIUM (L)	19½"	14"
LARGE (R)	22"	18"

completing the TABLES

With the table frames assembled, you're in the home stretch. All you have left to do is to make a top for each table and then add some floor glides to the bottoms of the legs.

THE TOPS. The tops are cut from panels glued up from ¾"-thick stock. The chart above shows the finished size for the three tops you'll need to make.

I started by gluing up a slightly oversized panel for each top. And although this a pretty straightforward job, it's still one you want to put some thought into. The top of a table is always one of its focal points. So when I glue up a top, I always take some extra time to make sure my boards have a good color and grain match. It's just a small detail that will really pay off in the completed project. For a good discussion on making your panels look their best, you'll want to check out the article on page 50.

A SUBTLE EDGE. Once the top panels have been cleaned up and cut to final size, the next step is to add a little detail. I didn't want to go overboard with a large or fancy molded edge, so my plan called for routing a subtle, ⅛" roundover with a short shoulder on both the upper and lower edges of the tops. This simple shape just softens the sharp edges and helps prevent any

Shop Tip: A Chip-free Edge

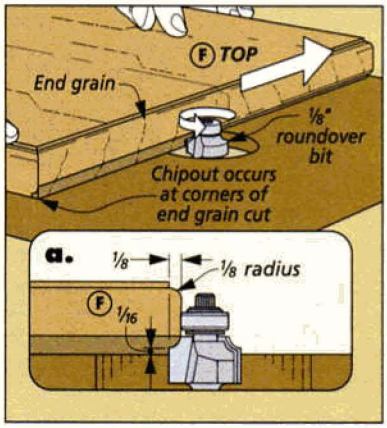

Rout End First. *When routing the molded edges on the top panels, always start with one end.*

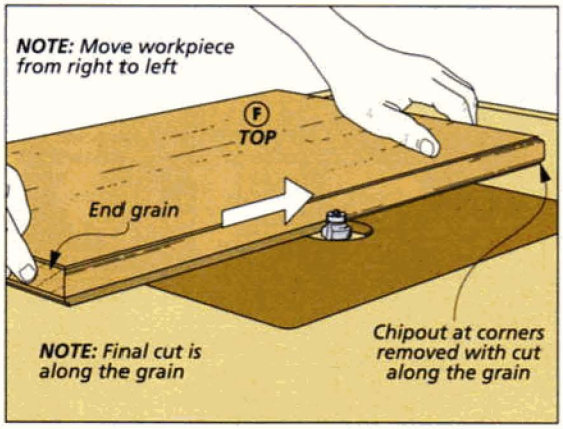

Next, One Side. *The following pass along the grain removes any chipout from the first end grain cut. Work around the panel, finishing with a long grain cut.*

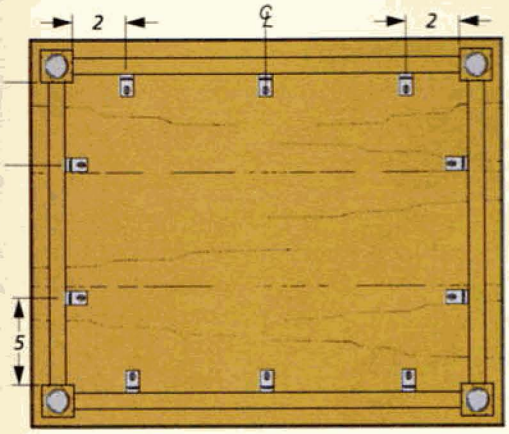

BOTTOM VIEW LARGE TABLE

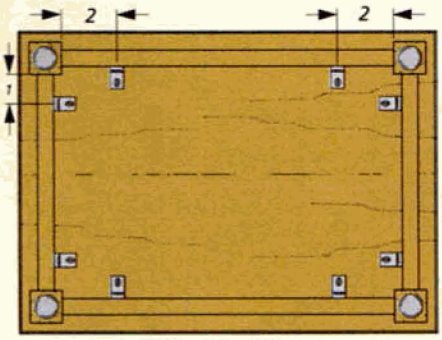

BOTTOM VIEW MEDIUM TABLE

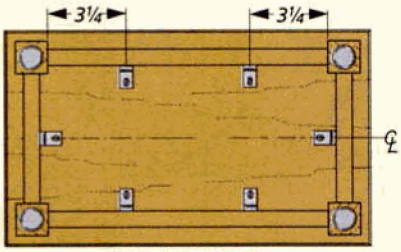

BOTTOM VIEW SMALL TABLE

***NOTE:** Use drawing above to locate table top fasteners*

damage when the tables are moved about. The drawings on the opposite page show you how to do this job at the router table.

ATTACHING THE TOPS. Once the tops are complete, they can be attached to the frames. The table top fasteners I used for this job do double-duty. They hold the top tightly to the frame while still allowing it to expand and contract.

To install the fasteners, you slide the raised ends into the groove in the rail and then screw them to the top (detail 'a' opposite page). But leave a little play in the groove so the top can "move." The fastener locations are shown above.

FLOOR GLIDES. Nesting tables are meant to be moved. So installing floor glides on the bottoms of the legs makes a lot of sense. The tables will slide easier, and the bottoms of the legs will be protected from damage. Just drill a centered pilot hole and tap the glide into place.

And after applying the finish, you might have the hardest job of all — deciding where to put the tables. But don't worry, they travel well.

Materials Lists, Supplies, & Cutting Diagram

Small Table

A Legs (4)	1½ x 1½ - 16
B Upper Side Rails (2)	¾ x 2½ - 14⅝
C Lower Side Rails (2)	¾ x 2¼ - 14⅝
D Upper End Rails (2)	¾ x 2½ - 7⅝
E Lower End Rails (2)	¾ x 2¼ - 7⅝
F Top (1)	¾ x 10 - 17

- (6) Tabletop Fasteners w/Screws
- (4) Floor Glides

Medium Table

G Legs (4)	1½ x 1½ - 20
H Upper Side Rails (2)	¾ x 2½ - 17⅛
I Lower Side Rails (2)	¾ x 2¼ - 17⅛
J Upper End Rails (2)	¾ x 2½ - 11⅝
K Lower End Rail (1)	¾ x 2¼ -11⅝
L Top (1)	¾ x 14 - 19½

- (8) Tabletop Fasteners w/Screws
- (4) Floor Glides

Large Table

M Legs (4)	1½ x 1½ - 24
N Upper Side Rails (2)	¾ x 2½ - 19⅝
O Lower Side Rails (2)	¾ x 2¼ - 19⅝
P Upper End Rails (2)	¾ x 2½ - 15⅝
Q Lower End Rail (1)	¾ x 2¼ - 15⅝
R Top (1)	¾ x 18 - 22

- (10) Tabletop Fasteners w/Screws
- (4) Floor Glides

1½" x 6½" - 72" Mahogany (6.5 Bd. Ft.)

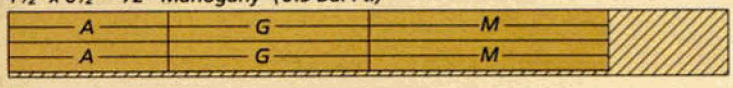

¾" x 5" - 96" Mahogany (2 Boards @ 3.3 Bd. Ft. Each)

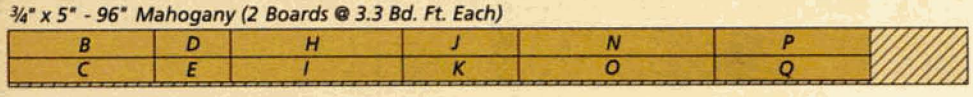

¾" x 7½" - 84" Mahogany (4.3 Bd. Ft.)

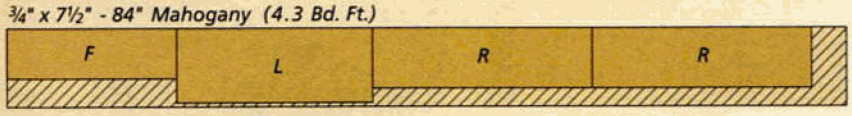

¾" x 7½" - 60" Mahogany (3.1 Bd. Ft.)

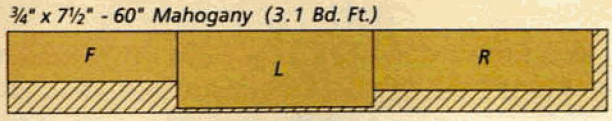

Brad Nailers

Do's & Don'ts for best results

With a little knowledge and a few simple techniques you can improve the way you use your brad nailer.

At one time, the only place you would find a brad nailer was in the production shop. Now, many woodworkers use this versatile tool.

A nailer works great when there isn't enough space to swing a hammer. It's easy to use and makes building jigs and fixtures a snap.

But to get the most from your brad nailer, there are a few things you need to know. One of the first things you'll want to understand is the type of nail the gun uses. And how the nail acts once you pull the trigger.

NAIL TIP. When you look at a clip of nails, you'll notice they're a little bit different from the brads you drive with a hammer. First of all, they come in a 100-nail clip that's a glued-up strip. The friction that occurs when you drive the nail actually heats up the glue and adds to its holding power in the wood.

If you take a closer look at the tip of the nail, you'll see it's shaped like a miniature chisel instead of the four-sided point you find on a standard brad nail (see drawing at left). This makes it easier for the nailer to drive and set the nail in one single blow.

SPLIT WORKPIECE. You'll also notice the brad nailer uses a smaller gauge nail. This lessens the chance you'll split the wood as you drive the nail. Even so, the workpiece can still split if you're not careful.

Placing the chisel-shaped brad tip parallel to the wood grain or too close to the edge of the workpiece can make the nail act just like a bench chisel. This often splits the wood, like you see in the left photo below.

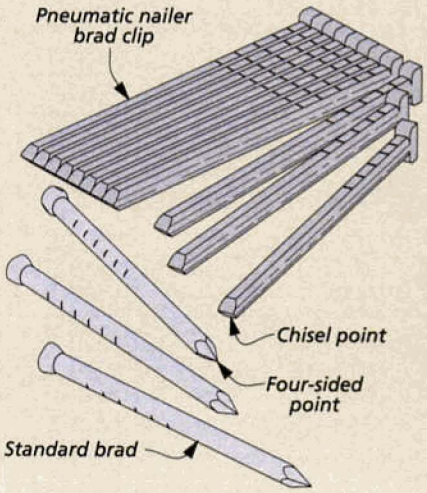

▲ Orienting the chisel point of the nail parallel with the grain of the wood increases the chance of splitting the workpiece.

▲ Turning the nail gun so the brad tip chisel point is positioned across the wood grain helps to prevent workpiece splitting.

So I always check the wood grain before pulling the trigger. Then I can orient the chisel tip across the grain (see right photo bottom of opposite page). This way, the nail won't spread out the wood fibers along the grain and split the workpiece.

NAIL LENGTH. Another thing you'll want to consider is the length of nail you use. I like to make sure the nail penetrates into the underlying frame or substrate at least 3/4" when nailing softer woods. And since hardwoods tend to hold the nail better, I try for 1/2" or more of penetration here.

You'll also want to keep in mind the longer the nail, the greater the chance of the nail bending or blowing out the side as it's driven. Understanding more about blowout can also help prevent this problem.

BLOWOUT. Having a nail blow out the side of the workpiece typically occurs when you nail a piece of solid wood to the edge of another piece. The nail tip either lifts the surface of the wood slightly or it may come completely out the side, like you see in the photo at right.

Improper aiming of the nailer can cause blowout. But it frequently results from hitting a hard spot in the wood. A knot in the wood or increased thickness of the annual rings in the wood is often the problem. In some cases, the brad can actually be bent as it passes through these hard areas in the wood, as shown in the drawing at right.

A common reaction is to solve the problem by moving the nailer farther away from the side of blowout and then tilting the tip away from blowout. But it's actually better to move the nailer tip closer to the edge and then point the tip slightly away from the side the nail has come out. This allows the nail to cut through the grain at more of an angle, like you see in the drawing at right.

Even doing all of this, blowouts can still occur. If this happens, the box below will show you the steps for repairing the problem.

CLAMP IT. One final thing. Your nailer isn't good at pulling joints or pieces of wood together. But it's great for holding everything in position once it's in place. So whenever possible, I try to clamp the pieces together before nailing them together. This way, the nail can use its holding power to maintain the workpiece or joint right where I want it. W

▲ As the pneumatic nailer is fired, the brad is sometimes deflected making the tip of the nail visible as it protrudes out the side of the workpiece.

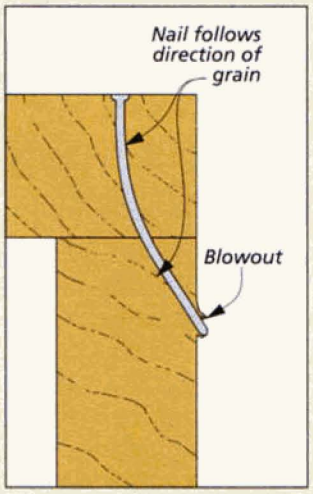

Blowout. *The nail can be deflected by the grain or a hard knot in the wood.*

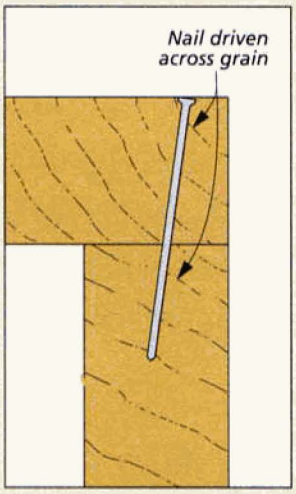

Nailer Orientation. *Angle the nail across the grain to prevent blowout.*

How-To: Blowout Repair

Making blowout repairs isn't difficult. But if it's done incorrectly, you can make matters worse. That's because the brad will often bend or break as you attempt to fix it. So don't try to pull the nail on through or back it out. Instead, clip the protruding brad as close to the surface as possible, like you see in Fig. 1. Then countersink the clipped end beneath the surface (Fig. 2). Next, you'll want to carefully glue the damaged splinters back in place, cover the area with wax paper, and clamp a wood block in place to hold everything in position until the glue dries (Fig. 3). Finally, use wood filler to cover up the nail hole and any other surface defects.

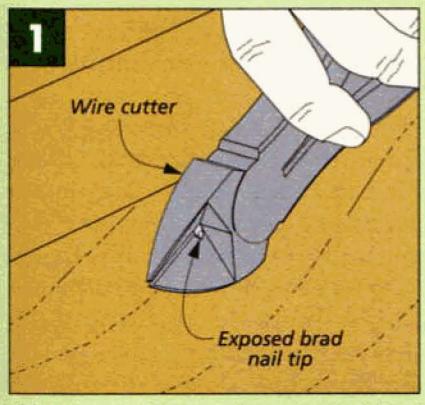

Clip Exposed Brad. *Use a pair of wire cutters to clip the exposed nail close to the surface of the workpiece.*

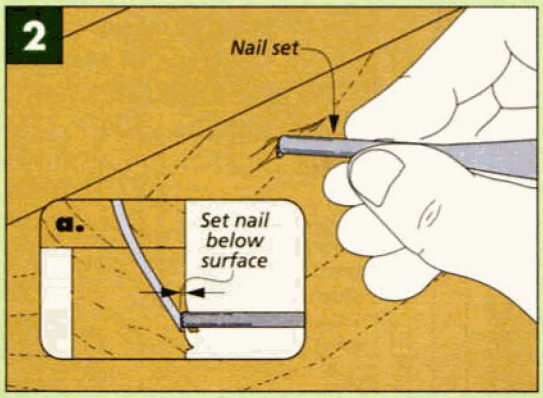

Countersink the Nail End. *A nail set or punch works best for positioning the remaining end of the nail below the surface of the wood.*

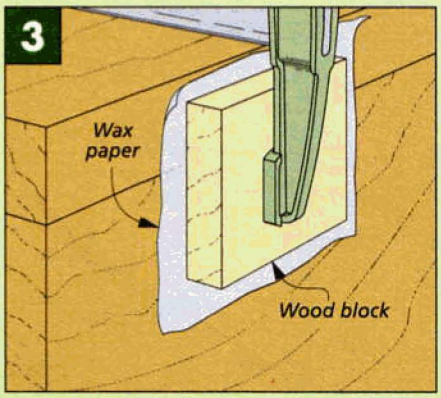

Replace the Splinters. *Carefully glue any splinters back in place, cover the area with wax paper, and clamp a block in place.*

top 10 Table Saw Upgrades

These easy-to-build add-ons help you get the most out of this shop workhorse. They'll earn their keep by helping you work smarter and safer.

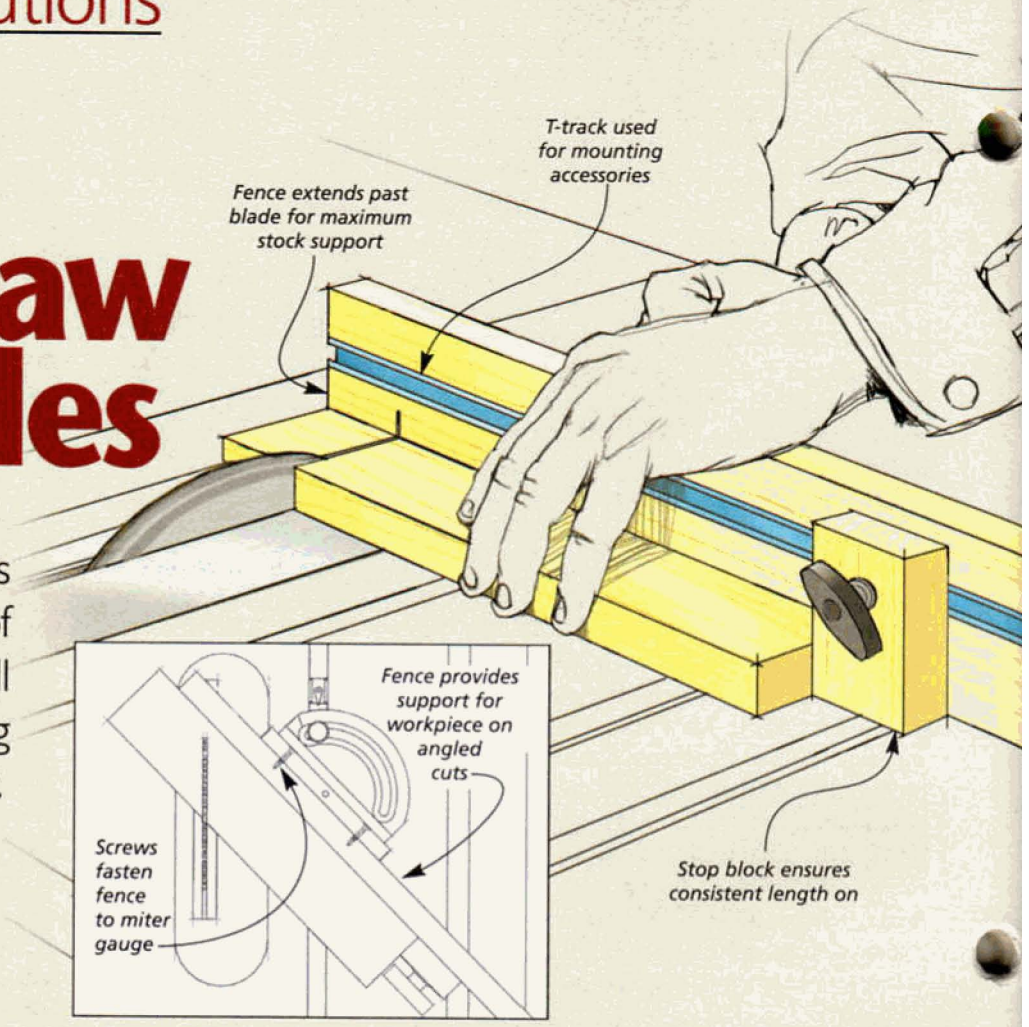

1 Miter Gauge Fence

The miter gauge that comes with your table saw often leaves a lot to be desired. The face doesn't do much to support a long workpiece which means you'll sometimes get tearout when crosscutting.

But you can make a big improvement to your miter gauge by adding an auxiliary fence. I use a nice, straight piece of hardwood or ¾" plywood at least 18" long. It should extend past the saw blade to help support the workpiece on the other side of the blade. And you'll want it high enough so the blade doesn't cut it in two.

It only takes a couple of screws to secure it to my miter gauge as you can see in the inset drawing above. I cut a groove in the fence and added an aluminum T-track. This allows you to add a stop block for cutting multiple pieces to the same length. Or you could mount clamps on it to hold the workpiece in position for accurate cuts.

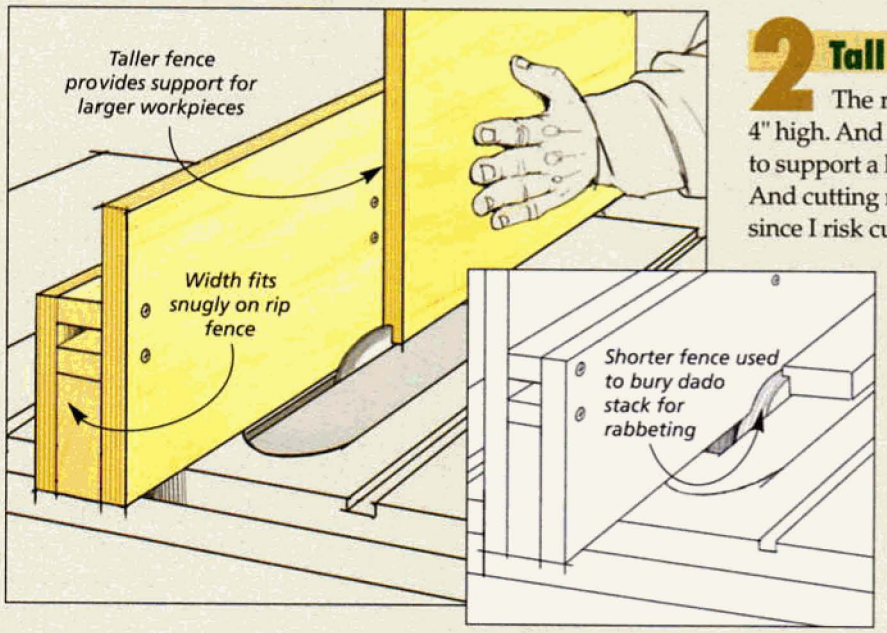

2 Tall Rip Fence

The rip fence on most table saws is usually only 3" or 4" high. And that's fine for ripping. But that's not high enough to support a long workpiece standing on end, or a large panel. And cutting rabbets with a dado blade becomes a bit of a trick since I risk cutting into my stock rip fence.

This fence solves all those problems. It provides a tall surface for supporting large or long workpieces. And if I flip it around, it becomes a sacrificial fence for rabbeting. I don't have to worry about the blade eating into my fence.

As you can see in the drawings, construction is pretty simple. The trick is to get a snug fit on your rip fence so it doesn't move. You might have to take it apart to "tweak" the fit, so you'll want to use screws instead of glue for assembly.

Use the short side as a sacrificial fence for burying your dado blade.

3 Safe Push Block

Having my hands so close to a sharp, spinning blade makes me nervous when I'm ripping stock. This push block gets my fingers up and out of the way.

The push block consists of three pieces. The body is a piece of scrap 4-6" long and 3-4" high. The handle is cut to shape and notched for the "heel" piece. The heel piece is made from either 1/8" or 1/4" hardwood or plywood. It's easily replaced as it gets chewed up by the saw blade.

To assemble the push block, I made the heel piece project about 1/4" from the bottom of the body. Then you can screw the pieces together.

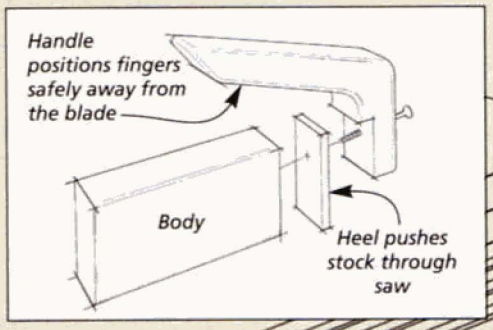

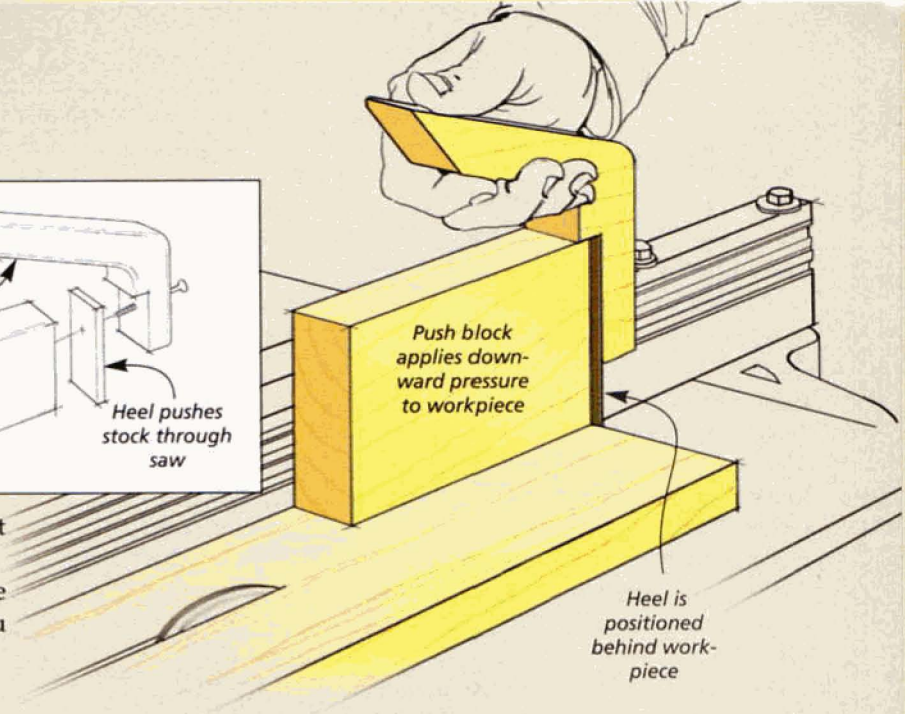

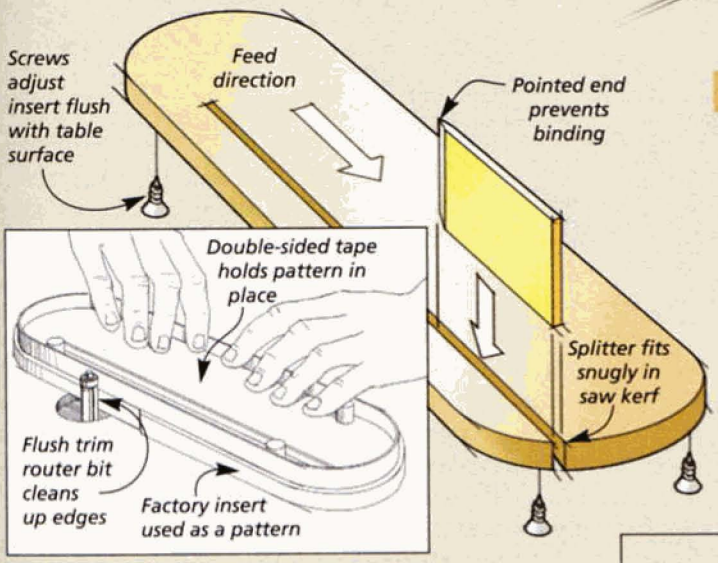

4 Anti-Kickback Splitter

Most factory-supplied splitters are hard to align and often difficult to remove. But a splitter serves an important function. It helps prevent a board from "pinching" the blade during a rip cut.

The first thing you'll need to do is make a new insert for your table saw. Extend the kerf to the back side of the insert to house the splitter (drawing at left).

Now you can make the splitter. I used a piece of hardboard. You'll want the thickness to fit snugly in the saw kerf. Aim for a tight friction fit. Form a point at the front of the splitter with a rasp or file and sand it smooth.

5 Featherboard

A featherboard is one of those tools that's simple in design but makes for safer, more accurate cuts.

You can make featherboards from scrap pieces. While you're set up to cut them, you might as well make several. They come in handy for a lot of shop operations.

The featherboard shown here is designed to be clamped in the miter slot on your table saw. This helps keep the workpiece tight against the rip fence.

To cut the "fingers" on the featherboards, use the setup shown in the lower left drawing. An auxiliary fence on the miter gauge helps support the stock.

The small piece that rides in the miter slot is kerfed and countersunk on the bottom for a flat-head screw. The screw head forces the sides out to clamp it in place as it is tightened.

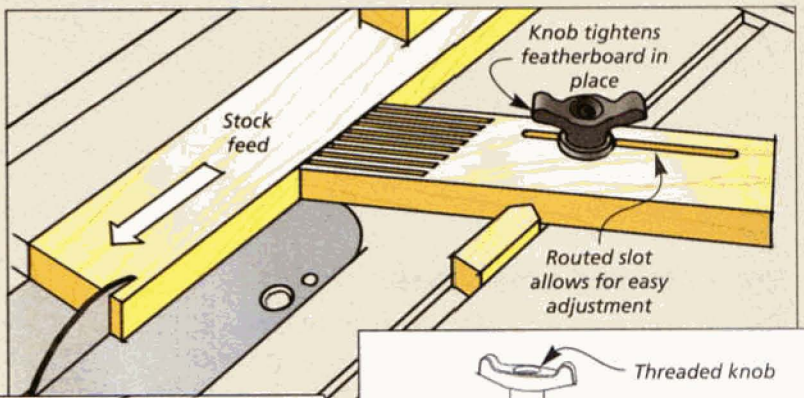

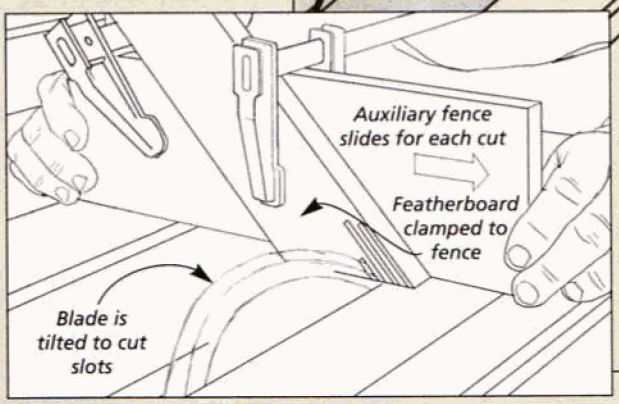

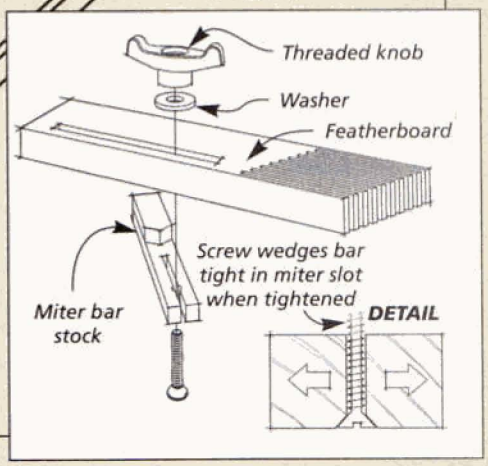

6 Tenon Jig

I like to cut tenons on my table saw. It's fast and accurate. And this tenon jig makes it easy.

As you can see in the drawings below and on the right, I made the jig to fit snugly on my rip fence. The two faces are fastened together with two "bridge" pieces. The width of these pieces is determined by the width of your rip fence.

The vertical support cleat is a straight piece of hardwood screwed to the face 90° to your saw table surface.

I can control the length of the tenon by adjusting the height of the blade. And I can control the location and thickness of the tenon by moving my rip fence either closer or farther away from the blade.

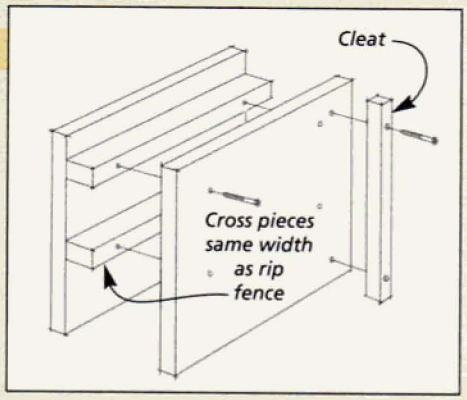

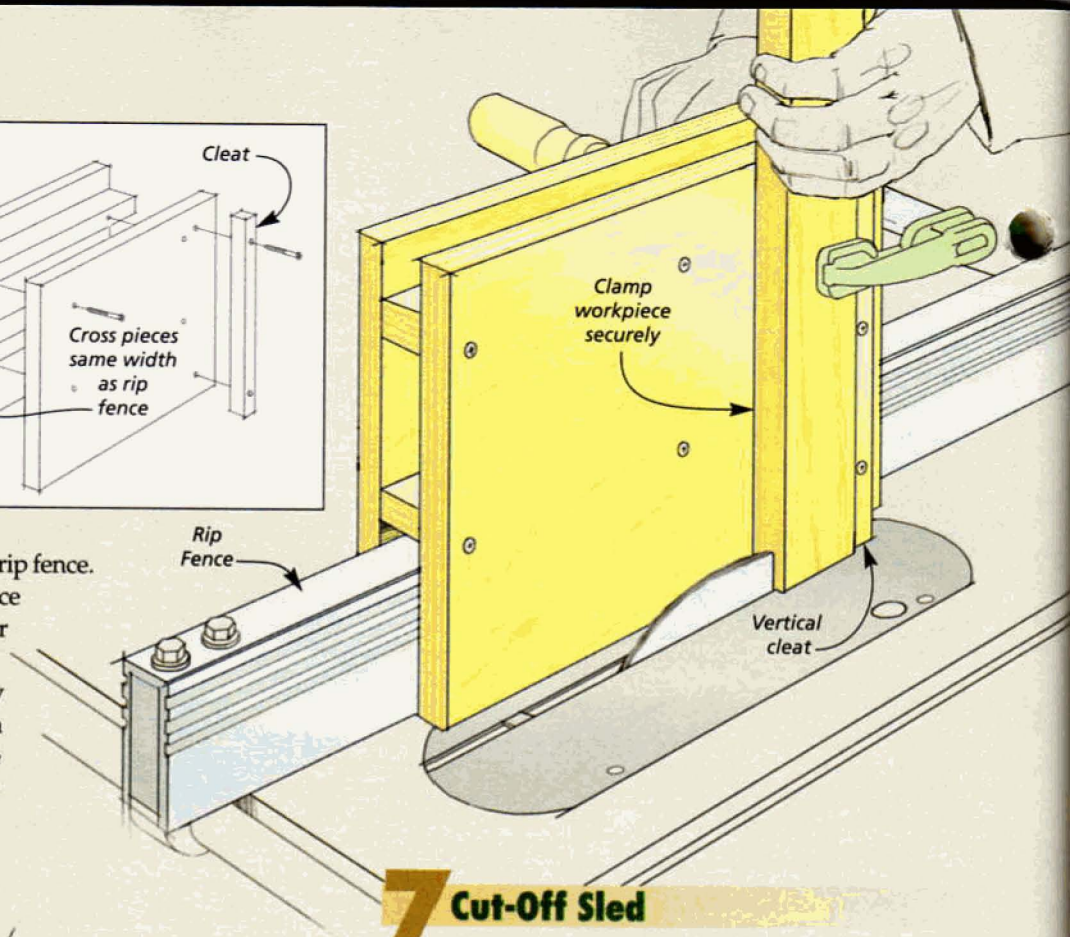

7 Cut-Off Sled

One of the handiest tools for cutting wide or long workpieces to length is this cut-off sled. You can attach a miter bar or two that ride in the saw's miter slots. Or you could attach it to your miter gauge as shown.

Construction of the sled starts with a ½"-thick piece of plywood or MDF. I made mine 6" wide and16" long.

Next, you'll add a fence. Here, I used ¾"-thick stock. I wanted to be able to adjust it for squareness, so I simply screwed it from the bottom to attach it to the base. I glued some sandpaper to the base to prevent my workpieces from moving during a cut.

Finally, attach the sled to your miter gauge with a couple of screws. Then you can trim off the end.

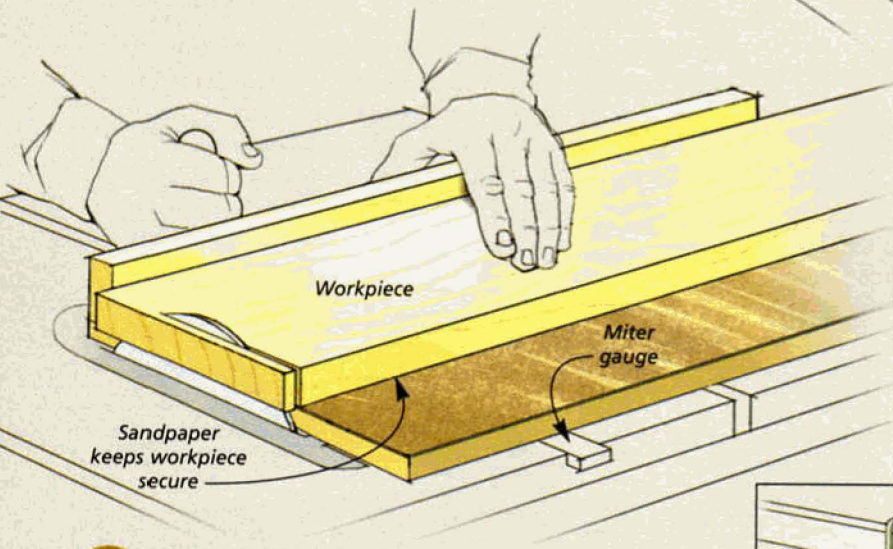

8 L-Shaped Stop Block

Cutting small parts to length on the table saw can be a delicate operation. The temptation is to set the rip fence for the length of the piece and use the miter gauge to make the cut. The problem is that the pieces can get pinched between the saw blade and rip fence and go flying across the shop.

The solution is to use an L-shaped stop block clamped to your rip fence, as you can see in the drawing at right. The end of your workpiece butts up against the stop block. Then as you push the piece into the blade, it "disengages" the stop block, creating a free space between the blade and the rip fence. Here, there is little danger of the cutoff getting pinched.

The stop block I use is simply two blocks of scrap wood screwed together at a right angle. You have to clamp the stop block far enough ahead of the blade so the workpiece doesn't touch the stop block when it contacts the blade.

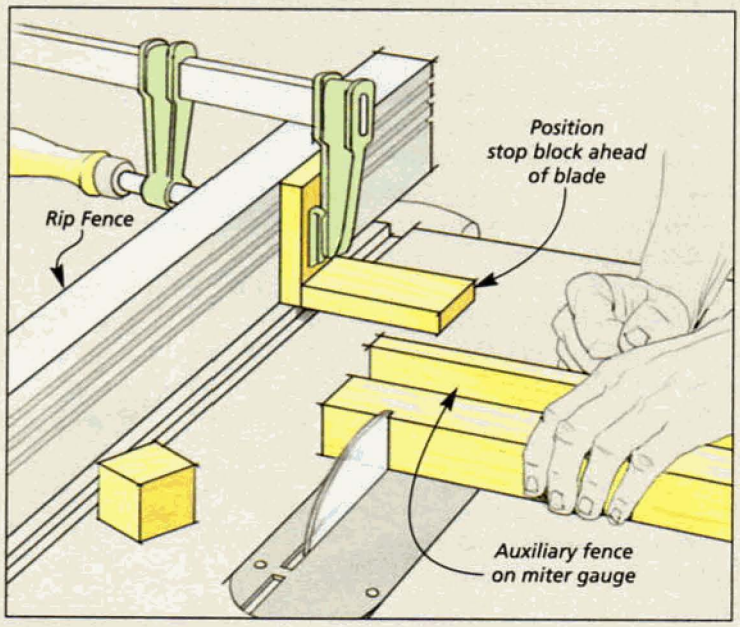

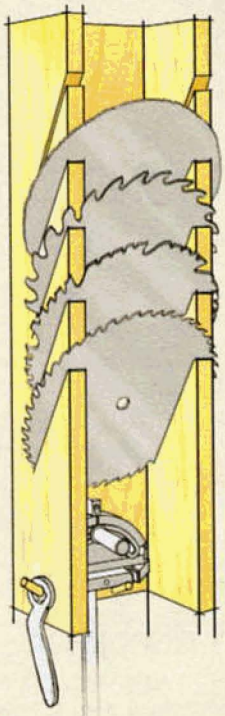

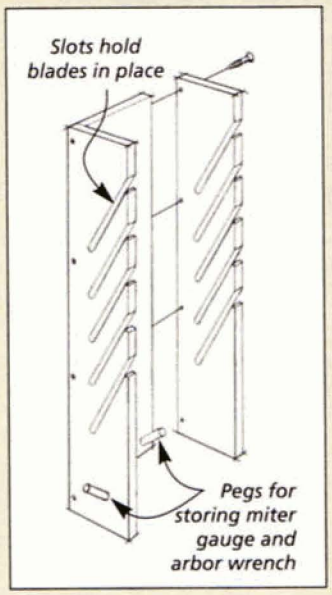

9 Accessory Storage

Finding a convenient place to store all your saw blades can be a challenge. Storing them in a drawer or stacked up on a nail in the wall can risk chipping the teeth. Here's a quick solution I use in my shop. All my blades are easily accessible and safe from damage. And I've got a place to hang my wrenches and miter gauge.

Looking at the drawings on the left, you'll see that the rack is made up of three pieces of ¾" plywood. The height of the rack will depend on how many blades you want to store. I cut the slots using my table saw set at 45°. I stacked the two side pieces together so that I could cut the slots in both sides at the same time.

The width of the back of the rack will depend on the diameter of your saw blades you'll be storing. I made my rack a couple inches narrower than the diameter of my blades (8" wide for storing 10"-dia. saw blades).

Add some pegs to store your wrenches and miter gauge. Then just hang it on the wall next to your saw.

10 Flip-Up Outfeed Support

If your shop's limited on space and you've got a cabinet saw, this outfeed support table can be a big help when ripping long stock. A couple of folding shelf brackets allow it to collapse down out of the way when it's no longer needed, saving valuable shop space.

There are a few things to keep in mind as you build the outfeed support. As you can see in the drawings, you'll need to size and position the parts to fit your saw. Make the surface of the outfeed support flush with your table saw's top. And you should make sure that the outfeed support doesn't interfere with the operation of your rip fence. Finally, the miter slots on the outfeed support should line up with those on your saw.

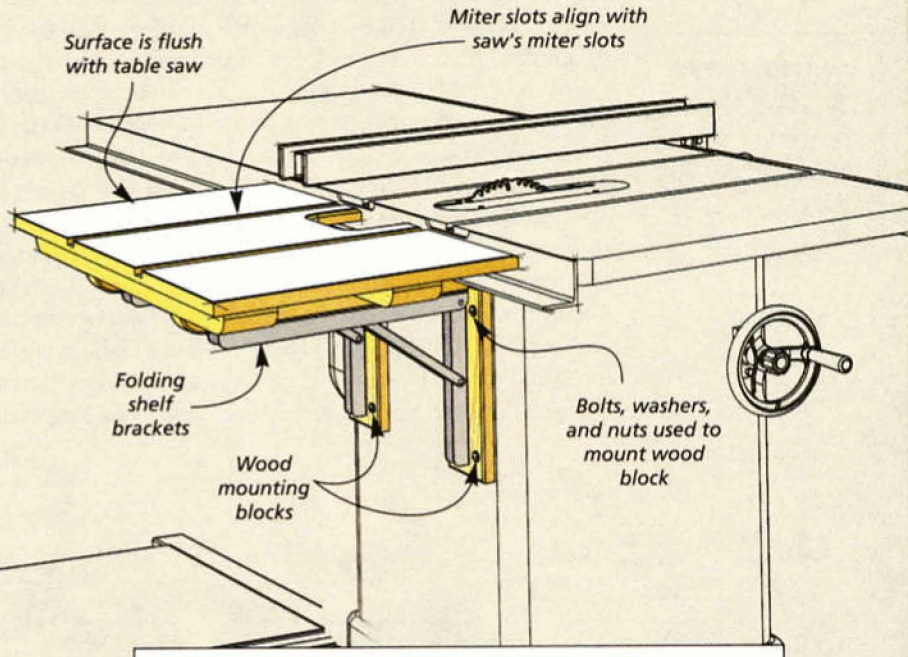

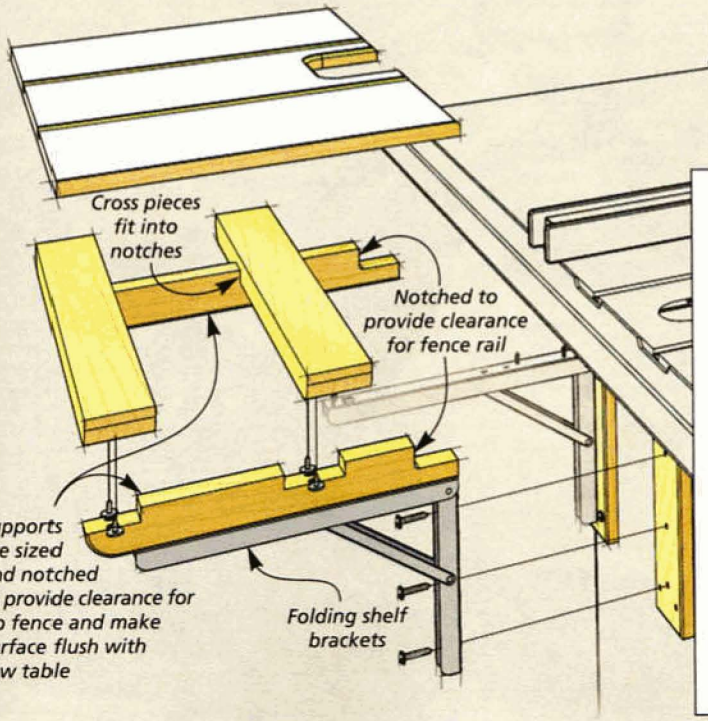

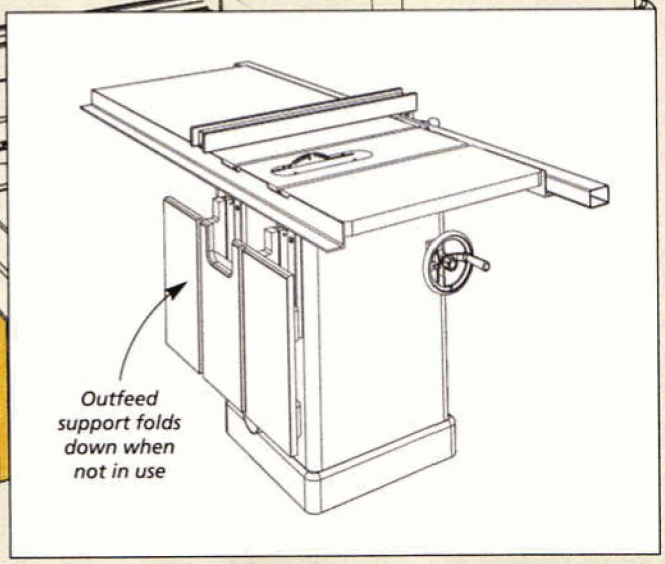

wood fillers

Make Mistakes Disappear

While they may not be able to cover every mistake, when used correctly, wood fillers can make minor flaws virtually disappear.

ONLINE EXTRA
video workshop
To see how to match wood filler to a finish, go to www.woodsmith.com

Although no one likes to admit it, most woodworkers will confess to having used wood filler at one time or another. And there's really nothing wrong with that. When used properly, wood fillers can be a very useful finishing tool.

All too often though, I see projects with blotchy wood filler repairs that stick out like a sore thumb, usually because the filler doesn't match the surrounding wood or stain. Or because there's more filler than wood. And that's where wood fillers get a bad name. Wood fillers should conceal mistakes, not call attention to them. To achieve this, there are some things to know about getting the best results when using fillers.

WOOD FILLERS vs. PORE FILLERS. Before going any further, it helps to know what wood filler is. Don't confuse wood fillers with pore fillers. Pore fillers are used to fill the open grain of the wood, giving you a smooth, level surface for creating a mirror-like finish. In contrast, wood fillers are used to repair cracks, gaps, and holes in a project.

You should also be aware that there's a difference between wood fillers and wood putties. Wood filler is applied to a project before it's stained or finished. It dries hard and can then be sanded and finished like wood. Wood putties, on the other hand, are applied after the project is finished. Wood putties don't ever really harden. I use them for things like filling small nail holes. But for fixing most other flaws, I turn to wood fillers.

REAL WOOD. Most wood fillers consist of actual wood fibers that are

mixed with a binder to create a paste that has the consistency of peanut butter. Coloring agents are used to create a variety of shades.

Some wood fillers are water based, while others are solvent (lacquer) based. I tend to stick with the water-based fillers simply because they don't dry out in the can as quickly. But in use, either one works well.

WHERE TO USE FILLERS. I use wood fillers primarily to patch small holes or cracks in the wood, or a narrow gap between two mating pieces. Wood filler manufacturers like to advertise that their products won't shrink or crack. But the wood around the filler is still going to expand and contract over time, and this can "pop" the filler out of a large opening. I find that wood fillers work best on cracks or gaps that are $^1/_{16}$" wide or smaller.

USING WOOD FILLERS. When it comes to using wood filler, there's not much to it. You simply force it into the crack or opening with a small putty knife or your finger. Leave the filler standing a little proud of the surface of the wood. Then after it dries, just sand it smooth.

As simple as this sounds, there are a couple of things to be aware of. First, if you're using wood filler on an open-grain wood (like oak or mahogany) you'll want to make sure that you apply the filler only where you need it. If you don't, the filler can work its way into the pores of the surrounding wood, making the repair stand out like a big blotch or smear when you stain or finish the project.

A good way to prevent this is to mask off the area of the repair. You can see how this is done by taking a look at the box at right.

COLOR MATCHING. As I mentioned earlier, fillers come in a variety of shades. But keep in mind that wood filler will often accept stain and finish differently than the surrounding wood. So the trick is to match the filler to the color of the stain or finish on the completed project. To do this, I like to make up a test board using several colors of wood fillers, see photo at left.

One last thing. Wood filler is a great tool for hiding minor defects, but it shouldn't be used as a cure-all to fill major gaps caused by sloppy joinery. In cases like this, you're almost always better off starting over or remaking the necessary parts. WW

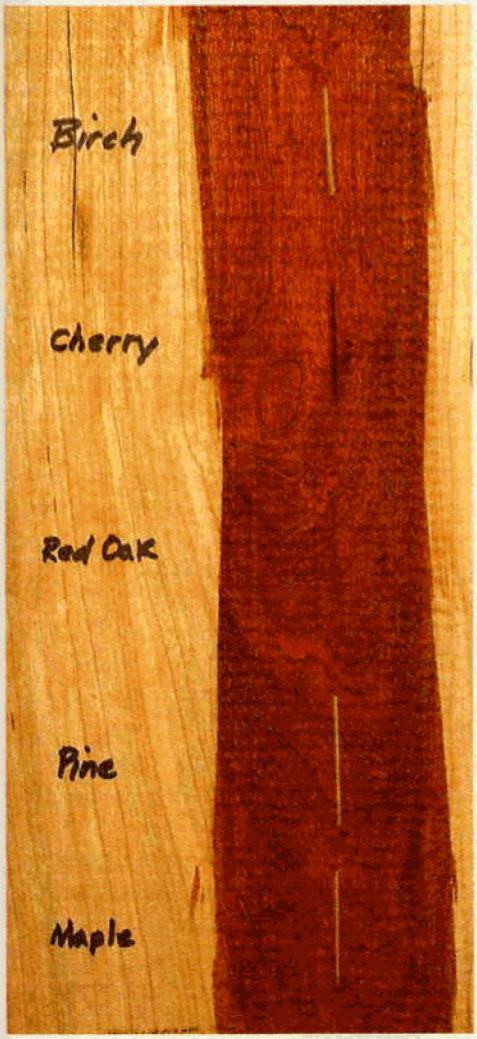

◄ To get the best color match, use a chisel to make several indentations in a scrap piece from your project. Then fill the indentations with different shades of filler and apply a stain to see which one most closely matches the wood.

How-To: Using Fillers

The Problem. *No matter how careful you are when cutting joints, small gaps like this one are common. But wood filler can take care of narrow gaps like this.*

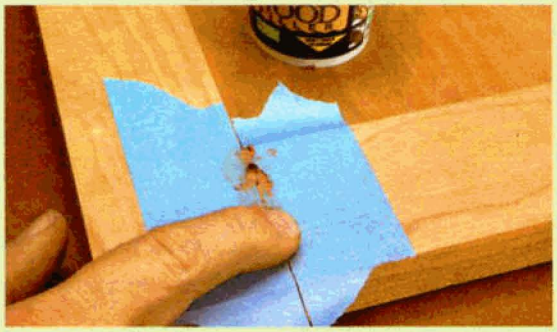

Mask Off the Repair. *Masking tape placed on both sides of the gap prevents the wood filler from being applied where you don't want it.*

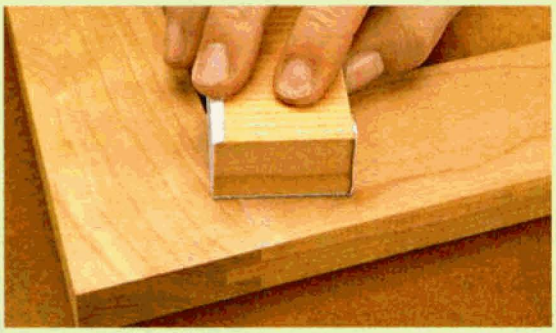

Sand the Filler Smooth. *After the wood filler has dried, you can remove the masking tape and sand the filler flush with the surface of the wood.*

Finished Repair. *After sanding, the wood filler blends into the surrounding area. Once the project is stained and finished, the repair will be all but invisible.*

Questions & Answers

Unfinished Lyptus looks a little bit like mahogany.

With two coats of lacquer it takes on a warmer look.

One application of mahogany gel stain with a lacquer finish.

Lyptus is Here to Stay

Q *My local lumber store is selling a wood called "Lyptus." What is it?*

Richard Burleson
Las Vegas, Nevada

A *Lyptus* is a fairly new product that's starting to show up in more and more lumberyards across the country. It's a eucalyptus hybrid grown on large plantations in South America. *Lyptus* is a very dense hardwood, on par with red oak or hard maple, currently used for flooring, furniture, molding, and cabinet work. You'll also find it available as veneered plywood in a variety of thicknesses.

There are some good reasons why *Lyptus* may soon rival traditional hardwoods. With a 15-year harvest cycle, *Lyptus* grows nearly 4 times faster than northern hardwoods, yet produces very tight and straight-grained lumber. This rapid production cycle guarantees woodworkers a consistent supply.

Another attractive feature of *Lyptus* is the cost. While similar to mahogany in appearance, it sells for less than half the price.

A SUSTAINABLE RESOURCE. From an environmental perspective, *Lyptus* is a real success story. Other indigenous trees are interspersed on the plantations to preserve the native ecosystems.

Aracruz Wood Products, the manufacturer of *Lyptus*, has been recognized by the international scientific community. They were awarded the Marcus Wallenberg Prize for advancements in the field of forestry.

WORKING WITH LYPTUS. Here in the *Woodsmith* shop, we've found *Lyptus* works well with power tools. You'll want to stick to carbide blades and bits when working with *Lyptus*, however, as it quickly dulls high-speed steel. And it tends to burn like cherry when routed.

Lyptus sands easily as well, and reveals subtle color variations . And even though it's an open-grained wood, it takes stain well without blotching, as shown in the bottom photo on the left.

COMING SOON. If it's not carried by your local lumber supplier today, it most likely will be soon. *Weyerhaeuser*, the exclusive distributor in the U.S., is expanding production of *Lyptus*.

Efficient forest management, the rapid growth cycle, and a state-of-the-art milling facility combine to produce over 32 million board feet per year. *Lyptus* may be an answer to diminishing hardwood resources and high prices. W

Do you have any questions for us?

If you have a question related to woodworking techniques, tools, finishing, or hardware, we'd like to hear from you.

Just write down your question and mail it to us: Woodsmith, Q&A, 2200 Grand Avenue, Des Moines, Iowa 50312. Or you can email us the question at: woodsmith@woodsmith.com.

Please include your full name, address, and daytime telephone number in case we have questions.

Sources

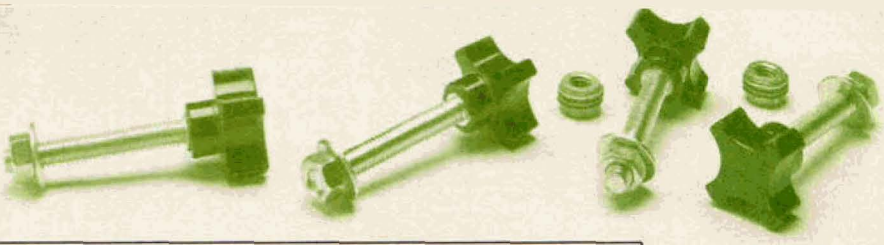

COMPACT DESK

You'll need a few pieces of hardware to build the compact desk shown on page 22. The magnetic catches (26559) and drawer guides (89690) came from *Rockler*. And I was able to order the bevel edge drawer pull (02W34.23) and the oval and round grommets (00U10.01 and 00U08.51) from *Lee Valley*. The only other hardware items you'll need are a piece of 1/4"-dia. steel rod for the shelf pins and some ordinary woodscrews.

In addition to the hardware, you'll need some plastic laminate to cover the plywood surfaces of the desk. Although you can use any color or texture of laminate you want, I ordered a 5' x 12' sheet of *Antique Copper LS* (D494-60) laminate from *WilsonArt*. And for the underside of the desk top, I ordered a 4' x 4' sheet of backing laminate.

NESTING TABLES

The nesting tables featured on page 32 don't require much in the way of hardware. You'll need some table top fasteners (34215) to attach the tops to the table bases. (Mounting screws are included with the fasteners.)

And then to make it easier to slide the tables out from their nested position, you can add floor glides (31049) to the bottoms of the legs. Both the table top fasteners and the glides are available from *Rockler* (see margin at right) or from similar sources.

ROSETTE CUTTERS

Carbide rosette cutters are available from the *Woodsmith Store* as well as several woodworking catalogs. The cutterhead with the interchangeable knives (shown on in the box on page 15) came from *MLCS Woodworking*.

PICTURE FRAME

To build the picture frame on page 16, you'll need some clear, 0.1"-thick acrylic, a piece of 1/4" steel rod for the pivot pins, a couple of brass washers, and a few woodscrews. I purchased all of these items at a local hardware store.

The only other hardware item you'll require is a pair of brass knobs (67553) for the doors. These are available from *Rockler*.

PRESS-FIT THREADED INSERTS

Industrial supply stores are a great source for a wide variety of press-fit threaded inserts. The inserts shown in the article came from *McMaster-Carr* (see margin at right). They also carry many other styles of threaded inserts that you may not have seen before.

The knock-down fittings (00N12.01) that are shown in the box on the bottom of page 9 were purchased from *Lee Valley*. You can find their contact information listed at right.

WESTERN BACK SAWS

Walk into just about any hardware store and you'll probably find a back saw sitting on a shelf. But if you're looking for a saw that can cut straight and stay on a line, a hardware store-variety back saw is probably going to fall short.

You can find better-quality back saws in most woodworking catalogs. Even here though, there's a wide range of prices and quality.

Out of the saws we looked at in the article on page 10, two brands consistently came to the top — *Lie-Nielsen* and *Adria Toolworks* (see margin at right). Although both of these saws cost a bit more than other brands, the results you get are well worth it.

Online Customer Service

Click on Subscriber Services at **www.woodsmith.com**

- Access your account status
- Change your mailing or email address
- Pay your bill
- Renew your subscription
- Tell us if you've missed an issue
- Find out if your payment has been received

MAIL ORDER SOURCES

Similar project supplies may be ordered from the following companies:

Woodsmith Store
800-444-7527
woodsmithstore.com
Back Saws, Rosette Cutters, Magnetic Catches Drawer Guides, Table Top Fasteners, Floor Glides, Brass Knobs

Rockler
800-279-4441
rockler.com
Drawer Guides, Magnetic Catches, Table Top Fasteners, Floor Glides, Brass Knobs

WilsonArt
800-433-3222
wilsonart.com
Plastic Laminate

McMaster-Carr
630-600-3600
mcmaster.com
Press-Fit Threaded Inserts

MLCS
800-533-9298
mlcswoodworking.com
Rosette Cutterhead & Knives

Lee Valley
800-871-8158
leevalley.com
Drawer Pull, Plastic Grommets, Knock-Down Fitting Nuts, Back Saws

Lie-Nielsen Toolworks
800-327-2520
lie-nielsen.com
Back Saws

Adria Tools
604-710-5748
adriatools.com
Back Saws

WOODSMITH PROJECT SUPPLIES

We now feature hardware from **ROCKLER** in many of our new project kits. To order, please use our toll-free order line, see below. It's open Monday through Friday, from 8 AM to 5 PM Central Time. Before calling, please have your VISA, MasterCard, Discover, or American Express card ready.

If you would prefer to mail in an order, please call the toll-free phone number below for more information concerning shipping charges as well as any applicable sales tax.

Woodsmith on the web

- "Online Extras" - Plans, Patterns, & More
- Order *Woodsmith* & *ShopNotes* Bound Volumes
- Project Plans You Can Download
- WoodNet Woodworking Forums, including:
  - Over 100 Woodworking Tips Online
  - Catalog of Project Kits, Tools, Jigs, & Plans
  - Links to Other Woodworking Sites

Call us at 1-800-444-7527 or online at www.woodsmith.com

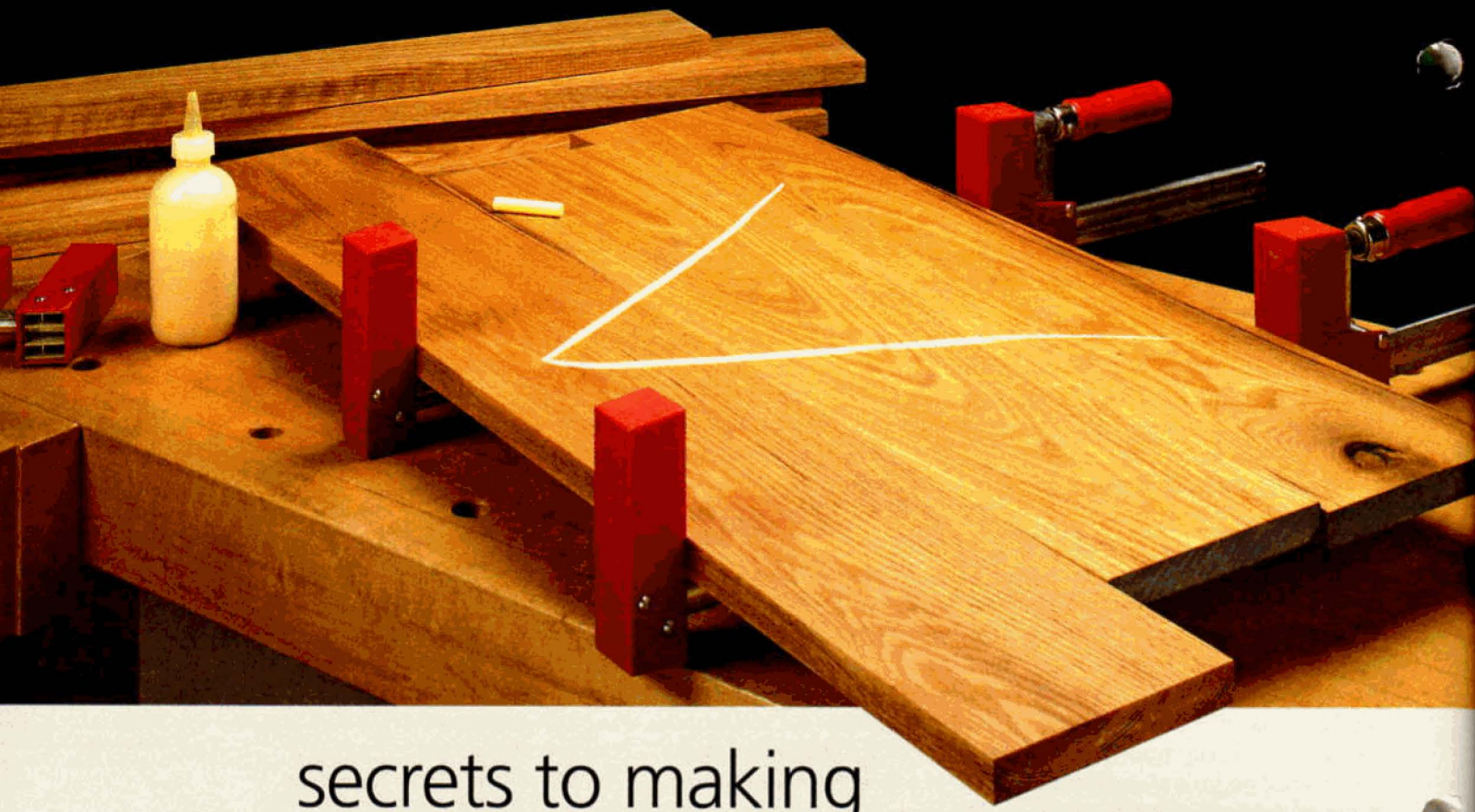

secrets to making Perfect-Looking Panels

You can make eye-catching panels — it's all in the grain pattern. Here are a few tips to show you how to get the best look.

Woodsmith GO ONLINE EXTRAS

See first hand how to make perfect panels with our online demonstration. Go to www.woodsmith.com

It's no secret that solid-wood panels add an extra level of craftsmanship to a project. But creating a great-looking panel is more than randomly gluing up some boards.

It's all about finding the right grain pattern that pleases the eye. Over the years, I've learned a few tricks to get the best appearance out of my panels.

MULTIPLE BOARDS. The panels for most projects are too wide to be made from a single board. You'll need to glue up several boards to make them. The problem is, even with just a few boards, there are literally dozens of different ways you can arrange them. But it's matching the grain of the boards that's the most important consideration in the overall look of your panel — and your project.

AVOID RANDOMNESS. It's always a temptation to try and use every last piece of wood when gluing up panels. But if you're not careful, you can end up with a panel like you see in photo 'a' (next page).

You'll notice that the boards are random widths. Some are narrow. Others are wider. And there's a mixture of grain patterns from wild grain to straight grain. While it's an efficient use of lumber, it can be a distraction to the eye. And it can make the panel look unbalanced. The solution is to even out the look across the entire panel.

AIM FOR BALANCE. If you look at photo 'b' you'll notice that this panel is also made up of boards of different widths. But I created a more balanced look by placing the two narrower boards on the outside edges of the panel. These two boards are the same width and frame the wide board in the center.

But there are a couple of reasons why I'm still not happy with the overall look of this panel. One reason is that you can see a big "bulls eye" in the center board. Your focus is naturally drawn to this feature, and that would be okay if it

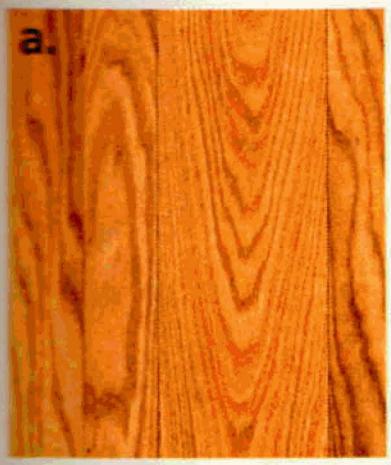

▲ Avoid random arrangements of boards in a panel. This can be a big distraction to its appearance.

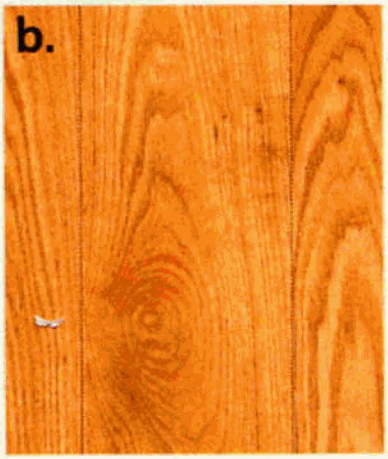

▲ A highly-figured grain pattern can be a highlight — or a distraction. Be sure it fits your project's style.

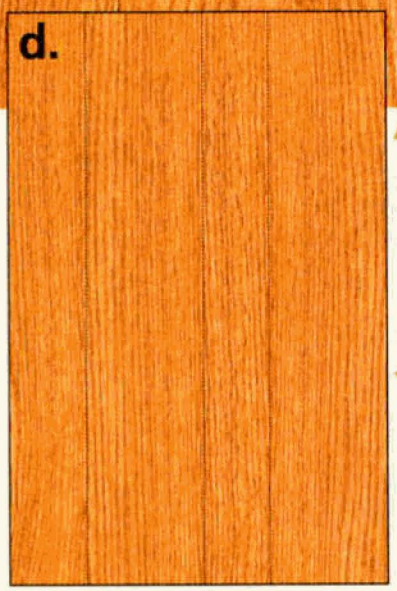

▲ A "cathedral" grain pattern blends into straight-grained boards to disguise the joint lines.

◄ All straight-grained boards make for an even look and less visible joint lines.

were the only panel in the project. But if there are multiple panels, this would steal too much attention away from the overall project.

Another thing I don't like about this panel is the poor grain match at the joint lines. It makes each board stand out too much.

BLENDING GRAIN PATTERNS. Photos 'c' and 'd' on the right combine the best of both worlds — a balanced look and matching grain.

To achieve balance, the panel in photo 'c' has the narrow boards on the outside with a wider board in the center. And in photo 'd' there are four boards of the same width to create an "even" look.

Another thing you'll notice are the joint lines — they're almost invisible. That's the goal. You can see in photo 'c' how the middle board has sort of a pointed (it's called "cathedral") grain pattern. But towards the edges of this board the grain is straighter. That's why I chose straight-grained boards for the sides of the panel. It helps the grain blend from board to board to hide the joint lines.

TRY SEVERAL VARIATIONS. When it comes to arranging boards for the best appearance, it pays to take your time. There are a multitude of variations you can try. You can turn each board end-for-end, and you can flip it over. Here is where your eyes can be your best tool. What you're looking for is that special look (see the tip below). When your project is finished and on display, it'll be worth the effort. W

How-To: Framing Picture-Perfect Panels

Arranging boards for a panel can be a trial-and-error process until you get something that looks right. Even then, it's sometimes hard to visualize what the finished panel will look like after it's glued up and trimmed.

So to help me get an idea of the panel's appearance before glue-up, I "frame" it. What I mean is that I'll use two L-shaped pieces of poster board. That way I can create an opening of any size to frame the panel (see photo at right).

Then you can arrange the boards within the movable frame for a "picture-perfect" panel every time.

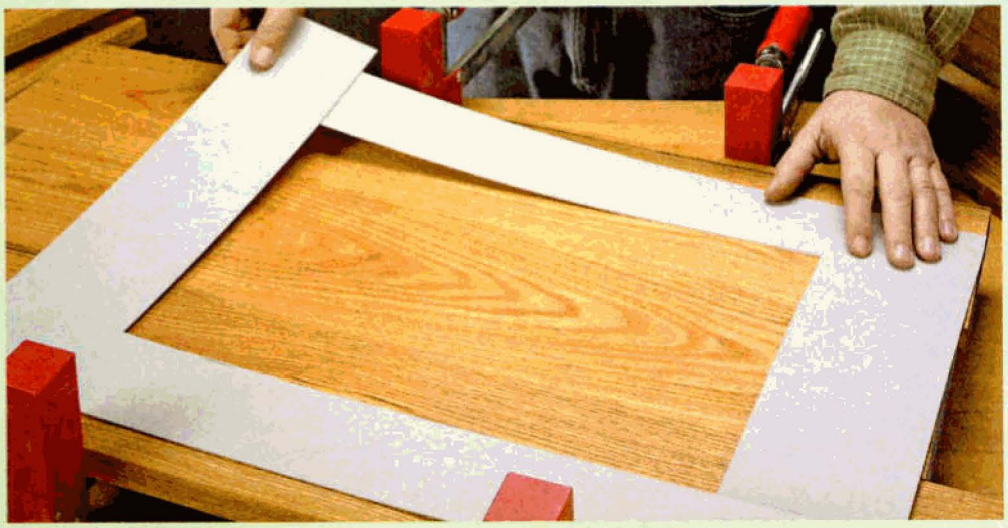

looking inside
Final Details

Nesting Tables. Building a set of tables like you see here doesn't mean you have triple the work. Our fool-proof router technique makes the job simple. The step-by-step plans begin on page 32.

Compact Desk. You'll find that sturdy, plywood construction makes this desk easy to build. And richly colored plastic laminate gives it plenty of style in a durable package. Take a look at the plans on page 22.

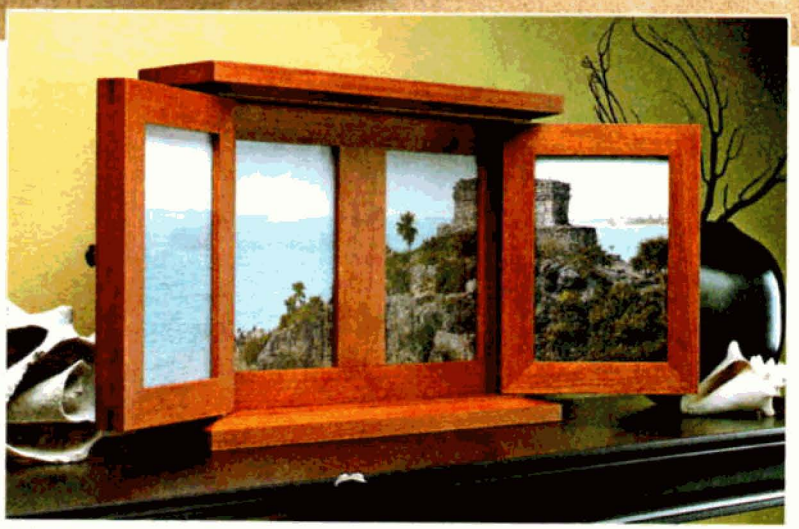

Folding Picture Frame. You can complete this small project in a weekend. But that doesn't mean it's short on details — like traditional, raised panels. We'll show you how to make them with an easy table saw technique. To find the step-by-step plans, turn to page 16.